8-2. PCB Diagrams

8-2-1. Top

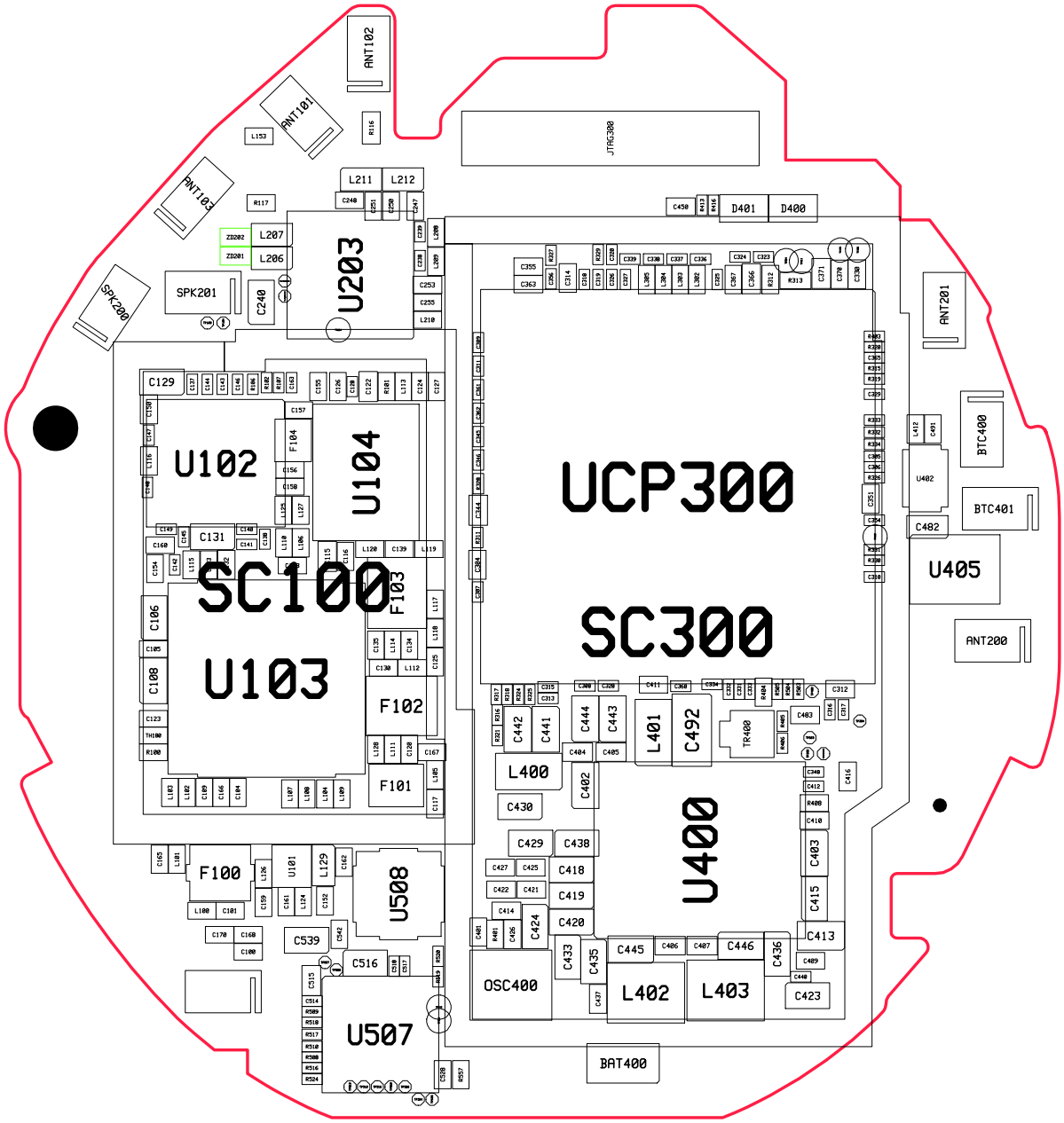

efrcom Lütfi Çağıl
CONFIDENTIAL
Confidential and proprietary-the contents in this service guide subject to change without prior notice.
Distribution, transmission, or infringement of any content or data from this document without Samsung's written authorization is strictly prohibited.

8-2-2. Bottom

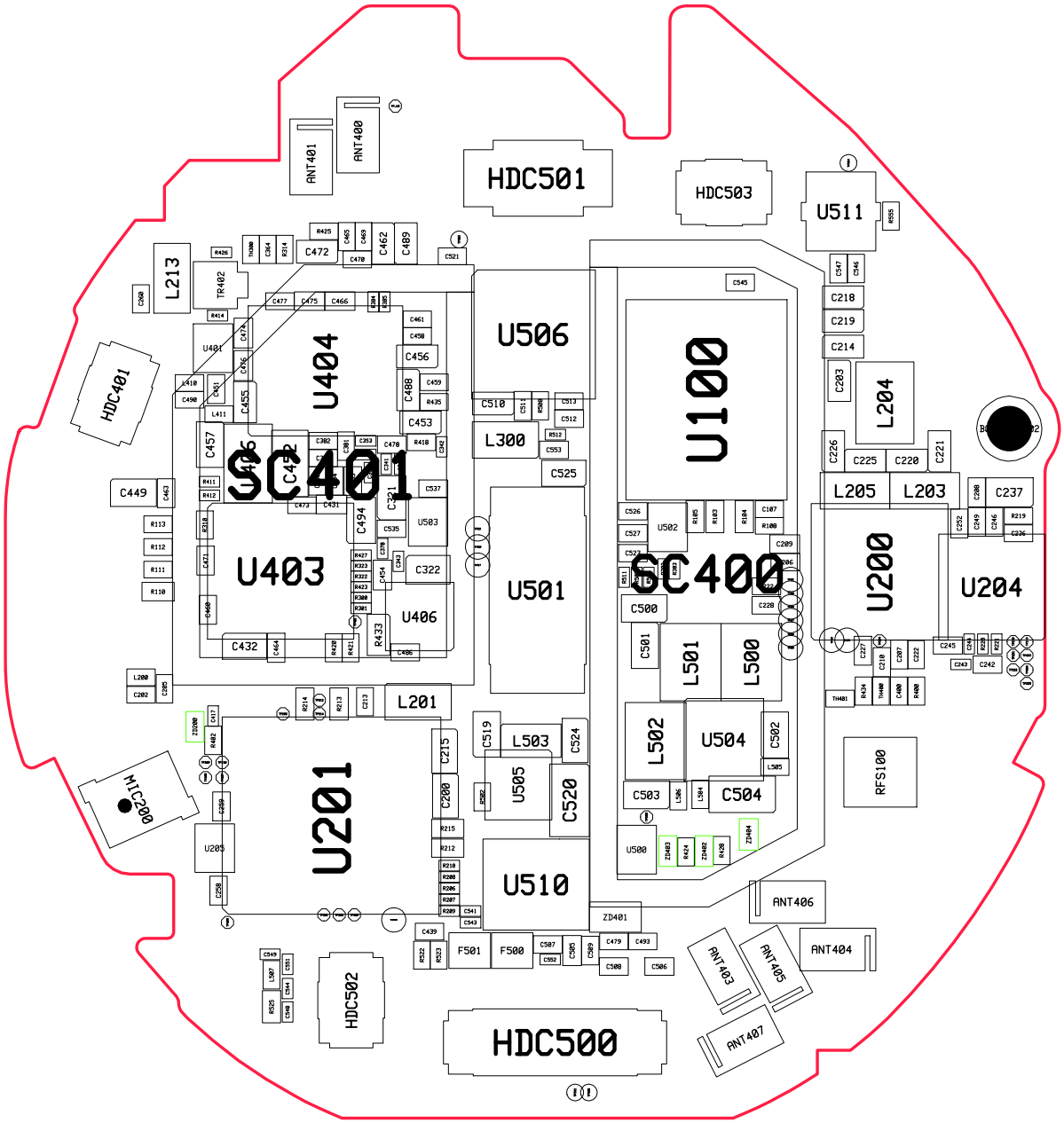

Confidential and proprietary-the contents in this service guide subject to change without prior notice.
Distribution, transmission, or infringement of any content or data from this document without Samsung's written authorization is strictly prohibited.

5. MAIN Electrical Parts List

SEC CODE	Design LOC	Description
0404-001887	D400	DIODE-SCHOTTKY
0404-001887	D401	DIODE-SCHOTTKY
0406-001452	ZD401	DIODE-TVS
0406-001506	ZD200	DIODE-TVS
0406-001506	ZD201	DIODE-TVS
0406-001506	ZD202	DIODE-TVS
0406-001592	ZD404	DIODE-TVS
0406-001596	ZD402	DIODE-TVS
0406-001596	ZD403	DIODE-TVS
0505-002652	TR400	FET-SILICON
0505-002652	TR402	FET-SILICON
0903-002118	U507	IC-MICROCONTROLLER
1003-002415	U511	IC-MOTOR DRIVER
1108-000605	UCP300UP	IC-MCP
1109-001518	U100	IC-SIM CARD
1201-003699	U103	IC-POWER AMP
1201-003702	U104	IC-POWER AMP
1201-003729	U101	IC-GPS AMP
1203-004818	U500	IC-POSI.FIXED REG.
1203-007000	U502	IC-POSI.FIXED REG.
1203-007294	U503	IC-POSI.FIXED REG.
1203-007365	U505	IC-DC/DC CONVERTER
1203-008057	U400	IC-POWER SUPERVISOR
1203-008200	U504	IC-DC/DC CONVERTER
1203-008204	U403	IC-POWER SUPERVISOR
1203-008261	U205	IC-POSI.FIXED REG.
1203-008261	U401	IC-POSI.FIXED REG.
1203-008468	U405	IC-VOL. DETECTOR
1203-008483	U406	IC-BATTERY
1203-008540	U404	IC-POWER SUPERVISOR
1204-003630	U204	IC-AUDIO PROCESSOR
1205-004833	U203	IC-CODEC
1205-004931	UCP300	IC-MODEM
1205-005079	U102	IC-TRANSCEIVER

Confidential and proprietary-the contents in this service guide subject to change without prior notice.
Distribution, transmission, or infringement of any content or data from this document without Samsung's written authorization is strictly prohibited.

1205-005154	U402	IC-SWITCH
1205-005293	U506	IC-TOUCH
1205-005398	U200	IC-NFC/RFID
1209-002294	U508	IC-PRESSURE SENSOR
1209-002344	U510	IC-ACCEL./GYRO SENSOR
1209-002395	U501	IC-OPTICS SENSOR
1404-001724	TH100	THERMISTOR-NTC
1404-001724	TH300	THERMISTOR-NTC
1404-001724	TH400	THERMISTOR-NTC
1404-001724	TH401	THERMISTOR-NTC
2007-007798	R433	R-CHIP
2007-008045	R418	R-CHIP
2007-008045	R425	R-CHIP
2007-008055	R420	R-CHIP
2007-008055	R502	R-CHIP
2007-008055	R522	R-CHIP
2007-008420	R402	R-CHIP
2007-008486	R523	R-CHIP
2007-008516	R312	R-CHIP
2007-008516	R408	R-CHIP
2007-008516	R557	R-CHIP
2007-008531	R219	R-CHIP
2007-008531	R404	R-CHIP
2007-008531	R424	R-CHIP
2007-008531	R428	R-CHIP
2007-008582	R435	R-CHIP
2007-008786	R421	R-CHIP
2007-008798	R108	R-CHIP
2007-008806	R101	R-CHIP
2007-009084	R555	R-CHIP
2007-009157	R314	R-CHIP
2007-009157	R400	R-CHIP
2007-009157	R401	R-CHIP
2007-009233	R222	R-CHIP
2007-009954	R100	R-CHIP

Confidential and proprietary-the contents in this service guide subject to change without prior notice.
Distribution, transmission, or infringement of any content or data from this document without Samsung's written authorization is strictly prohibited.

2007-009954	R434	R-CHIP
2007-011040	R411	R-CHIP
2007-011040	R412	R-CHIP
2007-011378	C365	R-CHIP
2007-011378	R210	R-CHIP
2007-011378	R316	R-CHIP
2007-011378	R319	R-CHIP
2007-011378	R332	R-CHIP
2007-011378	R334	R-CHIP
2007-011378	R423	R-CHIP
2007-011378	R426	R-CHIP
2007-011378	R503	R-CHIP
2007-011378	R524	R-CHIP
2007-011541	R427	R-CHIP
2007-011541	R504	R-CHIP
2007-011541	R505	R-CHIP
2007-011541	R506	R-CHIP
2007-011541	R507	R-CHIP
2007-011541	R511	R-CHIP
2007-011541	R516	R-CHIP
2007-011541	R518	R-CHIP
2007-011541	R519	R-CHIP
2007-011541	R520	R-CHIP
2007-011544	R330	R-CHIP
2007-011544	R331	R-CHIP
2007-011546	R327	R-CHIP
2007-011546	R328	R-CHIP
2007-011546	R329	R-CHIP
2007-011548	R405	R-CHIP
2007-011548	R406	R-CHIP
2007-011585	R414	R-CHIP
2007-011586	R206	R-CHIP
2007-011586	R207	R-CHIP
2007-011586	R208	R-CHIP
2007-011586	R209	R-CHIP

Confidential and proprietary-the contents in this service guide subject to change without prior notice.
Distribution, transmission, or infringement of any content or data from this document without Samsung's written authorization is strictly prohibited.

2007-011586	R413	R-CHIP
2007-011591	R300	R-CHIP
2007-011591	R301	R-CHIP
2007-011591	R302	R-CHIP
2007-011591	R303	R-CHIP
2007-011591	R304	R-CHIP
2007-011591	R305	R-CHIP
2007-011591	R322	R-CHIP
2007-011591	R323	R-CHIP
2007-011591	R324	R-CHIP
2007-011591	R325	R-CHIP
2007-011591	R509	R-CHIP
2007-011591	R510	R-CHIP
2007-011591	R512	R-CHIP
2007-011598	R102	R-CHIP
2007-011604	R416	R-CHIP
2007-011611	R220	R-CHIP
2007-011611	R221	R-CHIP
2007-011614	R326	R-CHIP
2007-011615	R106	R-CHIP
2007-011615	R107	R-CHIP
2007-011648	R500	R-CHIP
2203-000359	C203	C-CER,CHIP
2203-001239	C219	C-CER,CHIP
2203-002709	C455	C-CER,CHIP
2203-005344	C453	C-CER,CHIP
2203-005344	C472	C-CER,CHIP
2203-005682	C133	C-CER,CHIP
2203-005682	C152	C-CER,CHIP
2203-005682	C490	C-CER,CHIP
2203-005682	C491	C-CER,CHIP
2203-005725	C116	C-CER,CHIP
2203-005725	C158	C-CER,CHIP
2203-005725	C161	C-CER,CHIP
2203-005729	C247	C-CER,CHIP

Confidential and proprietary-the contents in this service guide subject to change without prior notice.
Distribution, transmission, or infringement of any content or data from this document without Samsung's written authorization is strictly prohibited.

2203-005729	C248	C-CER,CHIP
2203-005734	C125	C-CER,CHIP
2203-005734	C250	C-CER,CHIP
2203-005734	C251	C-CER,CHIP
2203-005736	C100	C-CER,CHIP
2203-005736	C104	C-CER,CHIP
2203-005736	C154	C-CER,CHIP
2203-005736	C156	C-CER,CHIP
2203-005736	C168	C-CER,CHIP
2203-005736	L111	C-CER,CHIP
2203-005789	C205	C-CER,CHIP
2203-005806	C364	C-CER,CHIP
2203-005806	C400	C-CER,CHIP
2203-005806	C401	C-CER,CHIP
2203-006121	C159	C-CER,CHIP
2203-006187	C124	C-CER,CHIP
2203-006194	C381	C-CER,CHIP
2203-006194	C382	C-CER,CHIP
2203-006318	L120	C-CER,CHIP
2203-006379	C379	C-CER,CHIP
2203-006379	C380	C-CER,CHIP
2203-006400	C162	C-CER,CHIP
2203-006400	C255	C-CER,CHIP
2203-006400	C477	C-CER,CHIP
2203-006423	C105	C-CER,CHIP
2203-006423	C107	C-CER,CHIP
2203-006423	C123	C-CER,CHIP
2203-006423	C213	C-CER,CHIP
2203-006423	C236	C-CER,CHIP
2203-006423	C513	C-CER,CHIP
2203-006423	C542	C-CER,CHIP
2203-006423	C546	C-CER,CHIP
2203-006626	C510	C-CER,CHIP
2203-006839	C126	C-CER,CHIP
2203-006839	C473	C-CER,CHIP

Confidential and proprietary-the contents in this service guide subject to change without prior notice.
Distribution, transmission, or infringement of any content or data from this document without Samsung's written authorization is strictly prohibited.

2203-006839	C521	C-CER,CHIP
2203-006841	C482	C-CER,CHIP
2203-006842	C214	C-CER,CHIP
2203-006979	C545	C-CER,CHIP
2203-006994	C222	C-CER,CHIP
2203-007210	C367	C-CER,CHIP
2203-007210	C370	C-CER,CHIP
2203-007295	C202	C-CER,CHIP
2203-007369	C208	C-CER,CHIP
2203-007369	C526	C-CER,CHIP
2203-007369	C535	C-CER,CHIP
2203-007385	C129	C-CER,CHIP
2203-007393	C106	C-CER,CHIP
2203-007393	C131	C-CER,CHIP
2203-007393	C200	C-CER,CHIP
2203-007393	C215	C-CER,CHIP
2203-007393	C240	C-CER,CHIP
2203-007393	C418	C-CER,CHIP
2203-007393	C419	C-CER,CHIP
2203-007393	C420	C-CER,CHIP
2203-007393	C423	C-CER,CHIP
2203-007393	C424	C-CER,CHIP
2203-007393	C429	C-CER,CHIP
2203-007393	C430	C-CER,CHIP
2203-007393	C432	C-CER,CHIP
2203-007393	C433	C-CER,CHIP
2203-007393	C435	C-CER,CHIP
2203-007393	C436	C-CER,CHIP
2203-007393	C438	C-CER,CHIP
2203-007393	C516	C-CER,CHIP
2203-007393	C539	C-CER,CHIP
2203-007449	C227	C-CER,CHIP
2203-007449	C253	C-CER,CHIP
2203-007449	C259	C-CER,CHIP
2203-007449	C304	C-CER,CHIP

Confidential and proprietary-the contents in this service guide subject to change without prior notice.
Distribution, transmission, or infringement of any content or data from this document without Samsung's written authorization is strictly prohibited.

2203-007449	C312	C-CER,CHIP
2203-007449	C314	C-CER,CHIP
2203-007449	C410	C-CER,CHIP
2203-007449	C414	C-CER,CHIP
2203-007449	C416	C-CER,CHIP
2203-007449	C421	C-CER,CHIP
2203-007449	C422	C-CER,CHIP
2203-007449	C425	C-CER,CHIP
2203-007449	C426	C-CER,CHIP
2203-007449	C427	C-CER,CHIP
2203-007449	C437	C-CER,CHIP
2203-007449	C553	C-CER,CHIP
2203-007474	C237	C-CER,CHIP
2203-007503	C452	C-CER,CHIP
2203-007503	C504	C-CER,CHIP
2203-007621	C137	C-CER,CHIP
2203-007621	C138	C-CER,CHIP
2203-007621	C140	C-CER,CHIP
2203-007621	C141	C-CER,CHIP
2203-007621	C142	C-CER,CHIP
2203-007621	C143	C-CER,CHIP
2203-007621	C144	C-CER,CHIP
2203-007621	C145	C-CER,CHIP
2203-007621	C146	C-CER,CHIP
2203-007621	C147	C-CER,CHIP
2203-007621	C148	C-CER,CHIP
2203-007621	C149	C-CER,CHIP
2203-007621	C238	C-CER,CHIP
2203-007621	C239	C-CER,CHIP
2203-007621	C243	C-CER,CHIP
2203-007621	C244	C-CER,CHIP
2203-007621	C305	C-CER,CHIP
2203-007621	C306	C-CER,CHIP
2203-007621	C307	C-CER,CHIP
2203-007621	C308	C-CER,CHIP

Confidential and proprietary-the contents in this service guide subject to change without prior notice.
Distribution, transmission, or infringement of any content or data from this document without Samsung's written authorization is strictly prohibited.

2203-007621	C309	C-CER,CHIP
2203-007621	C310	C-CER,CHIP
2203-007621	C311	C-CER,CHIP
2203-007621	C313	C-CER,CHIP
2203-007621	C315	C-CER,CHIP
2203-007621	C316	C-CER,CHIP
2203-007621	C317	C-CER,CHIP
2203-007621	C318	C-CER,CHIP
2203-007621	C319	C-CER,CHIP
2203-007621	C320	C-CER,CHIP
2203-007621	C323	C-CER,CHIP
2203-007621	C324	C-CER,CHIP
2203-007621	C325	C-CER,CHIP
2203-007621	C326	C-CER,CHIP
2203-007621	C327	C-CER,CHIP
2203-007621	C328	C-CER,CHIP
2203-007621	C329	C-CER,CHIP
2203-007621	C331	C-CER,CHIP
2203-007621	C332	C-CER,CHIP
2203-007621	C333	C-CER,CHIP
2203-007621	C334	C-CER,CHIP
2203-007621	C340	C-CER,CHIP
2203-007621	C341	C-CER,CHIP
2203-007621	C342	C-CER,CHIP
2203-007621	C343	C-CER,CHIP
2203-007621	C345	C-CER,CHIP
2203-007621	C346	C-CER,CHIP
2203-007621	C350	C-CER,CHIP
2203-007621	C352	C-CER,CHIP
2203-007621	C353	C-CER,CHIP
2203-007621	C354	C-CER,CHIP
2203-007621	C356	C-CER,CHIP
2203-007621	C360	C-CER,CHIP
2203-007621	C361	C-CER,CHIP
2203-007621	C362	C-CER,CHIP

Confidential and proprietary-the contents in this service guide subject to change without prior notice.
Distribution, transmission, or infringement of any content or data from this document without Samsung's written authorization is strictly prohibited.

2203-007621	C412	C-CER,CHIP
2203-007621	C440	C-CER,CHIP
2203-007621	C514	C-CER,CHIP
2203-007621	C517	C-CER,CHIP
2203-007621	C518	C-CER,CHIP
2203-007621	C541	C-CER,CHIP
2203-007621	C543	C-CER,CHIP
2203-007621	C549	C-CER,CHIP
2203-007621	C552	C-CER,CHIP
2203-007775	C524	C-CER,CHIP
2203-007775	C525	C-CER,CHIP
2203-007781	C492	C-CER,CHIP
2203-007781	C520	C-CER,CHIP
2203-007795	C108	C-CER,CHIP
2203-007795	C449	C-CER,CHIP
2203-007795	C457	C-CER,CHIP
2203-007795	C500	C-CER,CHIP
2203-007795	C501	C-CER,CHIP
2203-007795	C502	C-CER,CHIP
2203-007795	C503	C-CER,CHIP
2203-007795	C519	C-CER,CHIP
2203-007796	C132	C-CER,CHIP
2203-007796	C150	C-CER,CHIP
2203-007796	C206	C-CER,CHIP
2203-007796	C207	C-CER,CHIP
2203-007796	C210	C-CER,CHIP
2203-007796	C242	C-CER,CHIP
2203-007796	C245	C-CER,CHIP
2203-007796	C246	C-CER,CHIP
2203-007796	C249	C-CER,CHIP
2203-007796	C252	C-CER,CHIP
2203-007796	C258	C-CER,CHIP
2203-007796	C330	C-CER,CHIP
2203-007796	C351	C-CER,CHIP
2203-007796	C355	C-CER,CHIP

Confidential and proprietary-the contents in this service guide subject to change without prior notice.
Distribution, transmission, or infringement of any content or data from this document without Samsung's written authorization is strictly prohibited.

2203-007796	C363	C-CER,CHIP
2203-007796	C383	C-CER,CHIP
2203-007796	C384	C-CER,CHIP
2203-007796	C450	C-CER,CHIP
2203-007796	C451	C-CER,CHIP
2203-007796	C460	C-CER,CHIP
2203-007796	C463	C-CER,CHIP
2203-007796	C464	C-CER,CHIP
2203-007796	C471	C-CER,CHIP
2203-007796	C483	C-CER,CHIP
2203-007796	C486	C-CER,CHIP
2203-007796	C506	C-CER,CHIP
2203-007796	C507	C-CER,CHIP
2203-007796	C508	C-CER,CHIP
2203-007796	C509	C-CER,CHIP
2203-007796	C511	C-CER,CHIP
2203-007796	C512	C-CER,CHIP
2203-007796	C523	C-CER,CHIP
2203-007796	C527	C-CER,CHIP
2203-007796	C537	C-CER,CHIP
2203-007796	C547	C-CER,CHIP
2203-007854	C218	C-CER,CHIP
2203-008097	C458	C-CER,CHIP
2203-008097	C459	C-CER,CHIP
2203-008097	C461	C-CER,CHIP
2203-008097	C465	C-CER,CHIP
2203-008097	C469	C-CER,CHIP
2203-008097	C470	C-CER,CHIP
2203-008199	BAT400	C-CER,CHIP
2203-008242	C344	C-CER,CHIP
2203-008242	C366	C-CER,CHIP
2203-008242	C371	C-CER,CHIP
2203-008242	C431	C-CER,CHIP
2203-008242	C454	C-CER,CHIP
2203-008242	C466	C-CER,CHIP

Confidential and proprietary-the contents in this service guide subject to change without prior notice.
Distribution, transmission, or infringement of any content or data from this document without Samsung's written authorization is strictly prohibited.

2203-008242	C474	C-CER,CHIP
2203-008242	C475	C-CER,CHIP
2203-008242	C505	C-CER,CHIP
2203-008242	C515	C-CER,CHIP
2203-008386	C220	C-CER,CHIP
2203-008400	C378	C-CER,CHIP
2203-008462	C456	C-CER,CHIP
2203-008462	C462	C-CER,CHIP
2203-008463	C128	C-CER,CHIP
2203-008463	C336	C-CER,CHIP
2203-008463	C337	C-CER,CHIP
2203-008463	C338	C-CER,CHIP
2203-008463	C339	C-CER,CHIP
2203-008466	C544	C-CER,CHIP
2203-008466	C548	C-CER,CHIP
2203-008466	C551	C-CER,CHIP
2203-008470	C478	C-CER,CHIP
2203-008689	C415	C-CER,CHIP
2203-008794	C413	C-CER,CHIP
2203-008876	C115	C-CER,CHIP
2203-008876	C122	C-CER,CHIP
2203-008876	C209	C-CER,CHIP
2203-008876	C404	C-CER,CHIP
2203-008876	C405	C-CER,CHIP
2203-008876	C406	C-CER,CHIP
2203-008876	C407	C-CER,CHIP
2203-008876	C476	C-CER,CHIP
2203-008886	C479	C-CER,CHIP
2203-008886	C493	C-CER,CHIP
2203-008952	C488	C-CER,CHIP
2203-008952	C489	C-CER,CHIP
2203-009025	C163	C-CER,CHIP
2203-009076	C402	C-CER,CHIP
2203-009076	C403	C-CER,CHIP
2203-009076	C441	C-CER,CHIP

Confidential and proprietary-the contents in this service guide subject to change without prior notice.
Distribution, transmission, or infringement of any content or data from this document without Samsung's written authorization is strictly prohibited.

2203-009076	C442	C-CER,CHIP
2203-009076	C443	C-CER,CHIP
2203-009076	C444	C-CER,CHIP
2203-009076	C445	C-CER,CHIP
2203-009076	C446	C-CER,CHIP
2203-009328	C494	C-CER,CHIP
2703-002959	L103	INDUCTOR-SMD
2703-002960	L302	INDUCTOR-SMD
2703-002960	L303	INDUCTOR-SMD
2703-002960	L304	INDUCTOR-SMD
2703-002960	L305	INDUCTOR-SMD
2703-003754	L503	INDUCTOR-SMD
2703-003921	L104	INDUCTOR-SMD
2703-004038	C101	INDUCTOR-SMD
2703-004193	L200	INDUCTOR-SMD
2703-004286	L125	INDUCTOR-SMD
2703-004286	L127	INDUCTOR-SMD
2703-004288	C155	INDUCTOR-SMD
2703-004288	L101	INDUCTOR-SMD
2703-004289	L102	INDUCTOR-SMD
2703-004295	C120	INDUCTOR-SMD
2703-004295	C134	INDUCTOR-SMD
2703-004295	C139	INDUCTOR-SMD
2703-004295	L113	INDUCTOR-SMD
2703-004299	L107	INDUCTOR-SMD
2703-004302	L105	INDUCTOR-SMD
2703-004302	L106	INDUCTOR-SMD
2703-004302	L114	INDUCTOR-SMD
2703-004362	L117	INDUCTOR-SMD
2703-004363	L108	INDUCTOR-SMD
2703-004367	L126	INDUCTOR-SMD
2703-004368	L100	INDUCTOR-SMD
2703-004371	L115	INDUCTOR-SMD
2703-004371	L116	INDUCTOR-SMD
2703-004914	L201	INDUCTOR-SMD

Confidential and proprietary-the contents in this service guide subject to change without prior notice.
Distribution, transmission, or infringement of any content or data from this document without Samsung's written authorization is strictly prohibited.

2703-004914	L300	INDUCTOR-SMD
2703-005056	L500	INDUCTOR-SMD
2703-005056	L501	INDUCTOR-SMD
2703-005056	L502	INDUCTOR-SMD
2703-005066	L402	INDUCTOR-SMD
2703-005200	L403	INDUCTOR-SMD
2703-005225	L406	INDUCTOR-SMD
2703-005226	L400	INDUCTOR-SMD
2703-005226	L401	INDUCTOR-SMD
2703-005344	L203	INDUCTOR-SMD
2703-005344	L205	INDUCTOR-SMD
2703-005344	L213	INDUCTOR-SMD
2801-005304	OSC400	CRYSTAL-SMD
2901-001690	C321	FILTER-EMI SMD
2901-001690	C322	FILTER-EMI SMD
2901-001798	F500	FILTER-EMI SMD
2901-001798	F501	FILTER-EMI SMD
2903-001556	L204	FILTER-EMI SMD
2904-002068	F100	FILTER-SAW
2904-002132	F104	FILTER-SAW
2904-002136	F101	FILTER-SAW
2910-000213	F102	DUPLEXER-SAW
2910-000216	F103	DUPLEXER-SAW
3003-001215	MIC200	MIC MEMS
3301-001659	L129	BEAD-SMD
3301-001812	L206	BEAD-SMD
3301-001812	L207	BEAD-SMD
3301-001885	L211	BEAD-SMD
3301-001885	L212	BEAD-SMD
3301-001895	L124	BEAD-SMD
3301-002235	L504	BEAD-SMD
3301-002235	L505	BEAD-SMD
3301-002235	L506	BEAD-SMD
3301-002235	L507	BEAD-SMD
3301-002242	L208	BEAD-SMD

Confidential and proprietary-the contents in this service guide subject to change without prior notice.
Distribution, transmission, or infringement of any content or data from this document without Samsung's written authorization is strictly prohibited.

3301-002242	L209	BEAD-SMD
3301-002242	L210	BEAD-SMD
3301-002242	L410	BEAD-SMD
3301-002242	L411	BEAD-SMD
3301-002242	L412	BEAD-SMD
3705-001945	RFS100	CONNECTOR-COAXIAL
3711-008600	HDC501	CONNECTOR-HEADER
3711-008740	HDC500	CONNECTOR-HEADER
3711-008800	HDC401	CONNECTOR-HEADER
3711-008800	HDC502	CONNECTOR-HEADER
3711-008800	HDC503	CONNECTOR-HEADER
3712-001604	ANT100	CONNECTOR-TERMINAL
3712-001604	ANT101	CONNECTOR-TERMINAL
3712-001604	ANT102	CONNECTOR-TERMINAL
3712-001604	ANT200	CONNECTOR-TERMINAL
3712-001604	ANT201	CONNECTOR-TERMINAL
3712-001604	BTC400	CONNECTOR-TERMINAL
3712-001604	BTC401	CONNECTOR-TERMINAL
3712-001604	SPK200	CONNECTOR-TERMINAL
3712-001604	SPK201	CONNECTOR-TERMINAL
3712-001621	ANT400	CONNECTOR-TERMINAL
3712-001621	ANT401	CONNECTOR-TERMINAL
3712-001621	ANT403	CONNECTOR-TERMINAL
3712-001621	ANT404	CONNECTOR-TERMINAL
3712-001621	ANT405	CONNECTOR-TERMINAL
3712-001621	ANT406	CONNECTOR-TERMINAL
3712-001621	ANT407	CONNECTOR-TERMINAL
4709-002319	U201	RF-MODULE
GH02-11419A	SC300SP	SHIELD CAN TAPE-FRONT A
GH02-11423A	SC400SP	SHIELD CAN TAPE-REAR A
GH63-11819A	SC300	SHIELD CAN-FRONT A
GH63-11823A	SC400	SHIELD CAN-REAR A
GH63-11824A	SC401	SHIELD CAN-REAR B
GH80-03321A	R103	SOLDER-CREAM
GH80-03321A	R104	SOLDER-CREAM

Confidential and proprietary-the contents in this service guide subject to change without prior notice.
Distribution, transmission, or infringement of any content or data from this document without Samsung's written authorization is strictly prohibited.

GH80-03321A	R105	SOLDER-CREAM
GH80-03321A	R111	SOLDER-CREAM
GH80-03321A	R212	SOLDER-CREAM
GH80-03321A	R215	SOLDER-CREAM
GH98-38404A	SC100	ASSY SHIELD CAN-FRONT B

Please consult the GSPN website (Samsung Portal) for the most recent version of the product's part list.

Confidential and proprietary-the contents in this service guide subject to change without prior notice.
Distribution, transmission, or infringement of any content or data from this document without Samsung's written authorization is strictly prohibited.

8. Level 3 Repair

8-1. Block Diagram

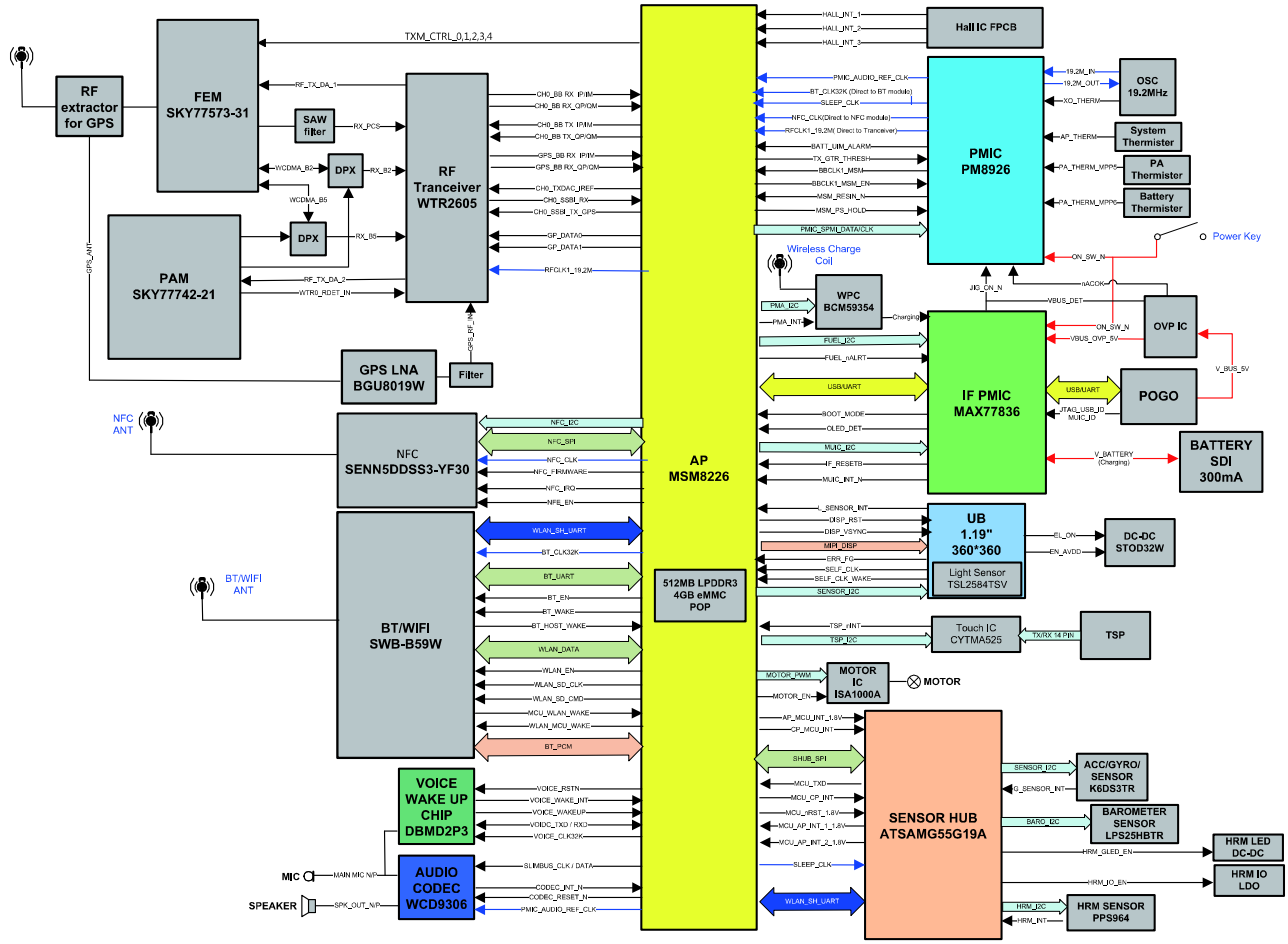

Confidential and proprietary-the contents in this service guide subject to change without prior notice.
Distribution, transmission, or infringement of any content or data from this document without Samsung's written authorization is strictly prohibited.

8-3. Flow Chart of Troubleshooting

Equipments

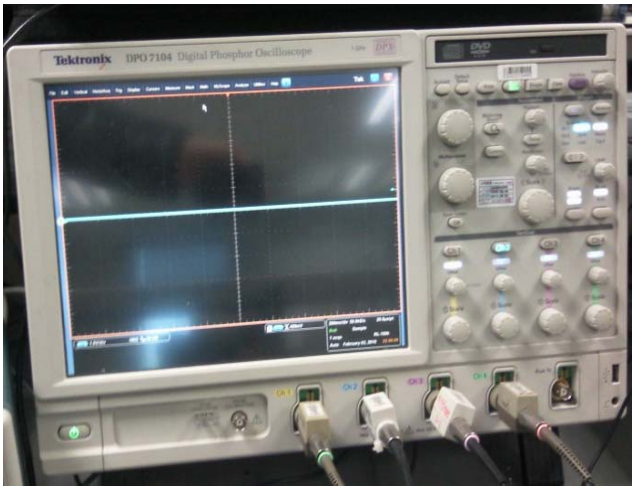

↑ Oscilloscope

↑ Digital Multimeter

↑ Power Supply

↑ + driver, ESD Safe Tweezer

↑ N4010A Wireless Connectivity Analyzer

↑ Soldering iron

Confidential and proprietary-the contents in this service guide subject to change without prior notice.
Distribution, transmission, or infringement of any content or data from this document without Samsung's written authorization is strictly prohibited.

8-3-1. Power On

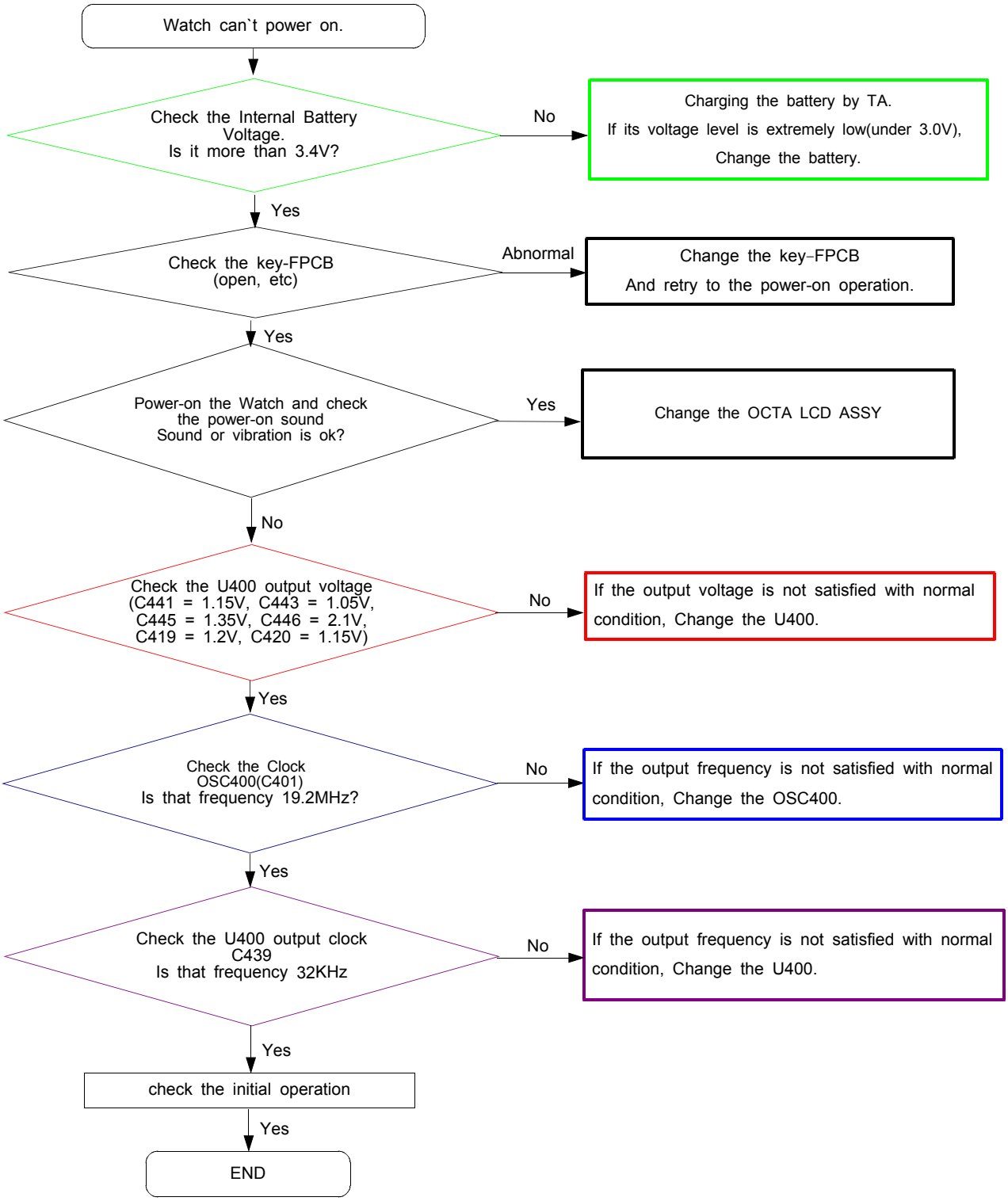

Confidential and proprietary-the contents in this service guide subject to change without prior notice.
Distribution, transmission, or infringement of any content or data from this document without Samsung's written authorization is strictly prohibited.

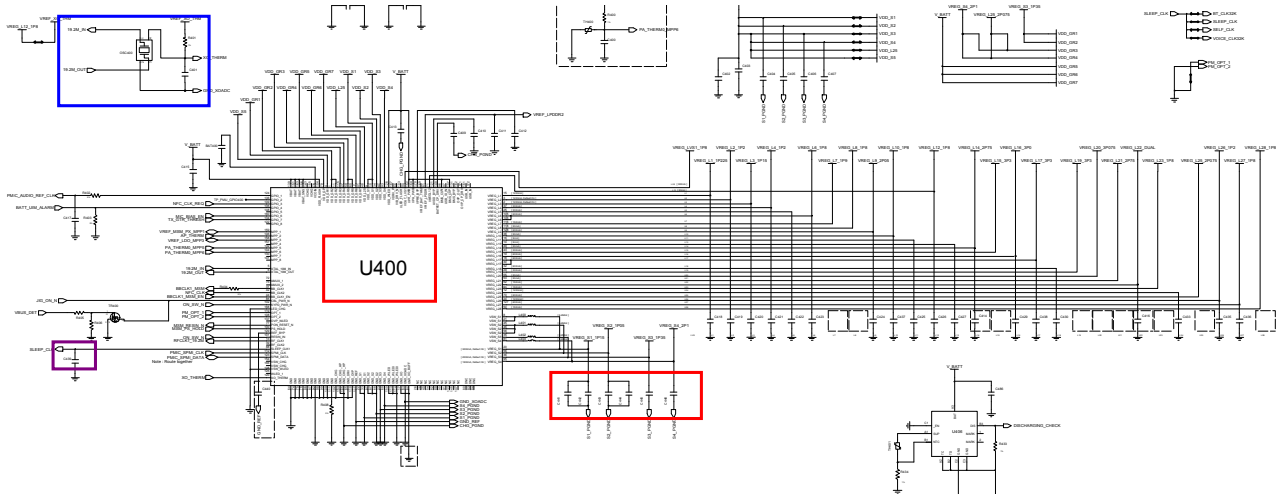

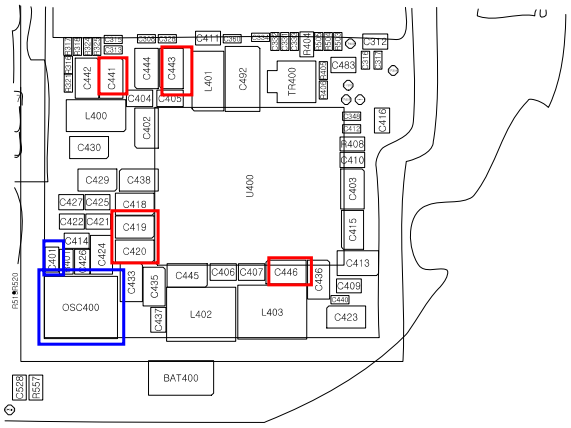

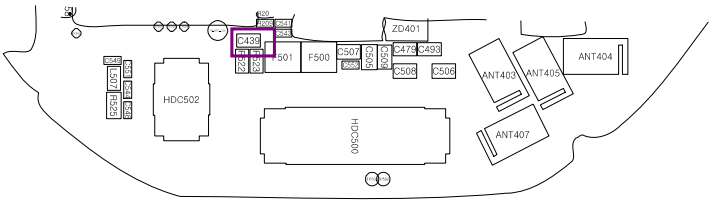

Confidential and proprietary-the contents in this service guide subject to change without prior notice.
Distribution, transmission, or infringement of any content or data from this document without Samsung's written authorization is strictly prohibited.

8-3-2. Initial (Lock up)

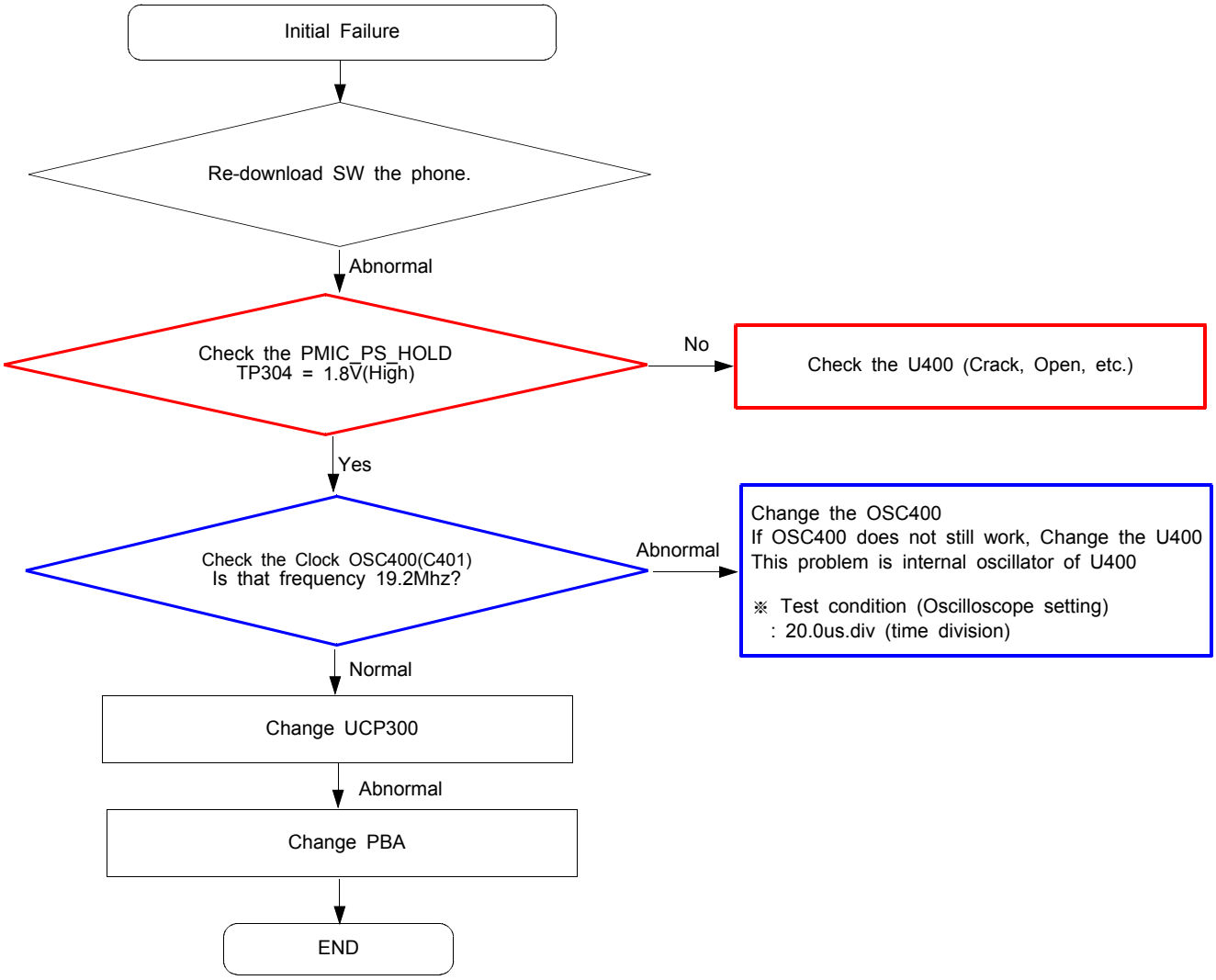

Confidential and proprietary-the contents in this service guide subject to change without prior notice.
Distribution, transmission, or infringement of any content or data from this document without Samsung's written authorization is strictly prohibited.

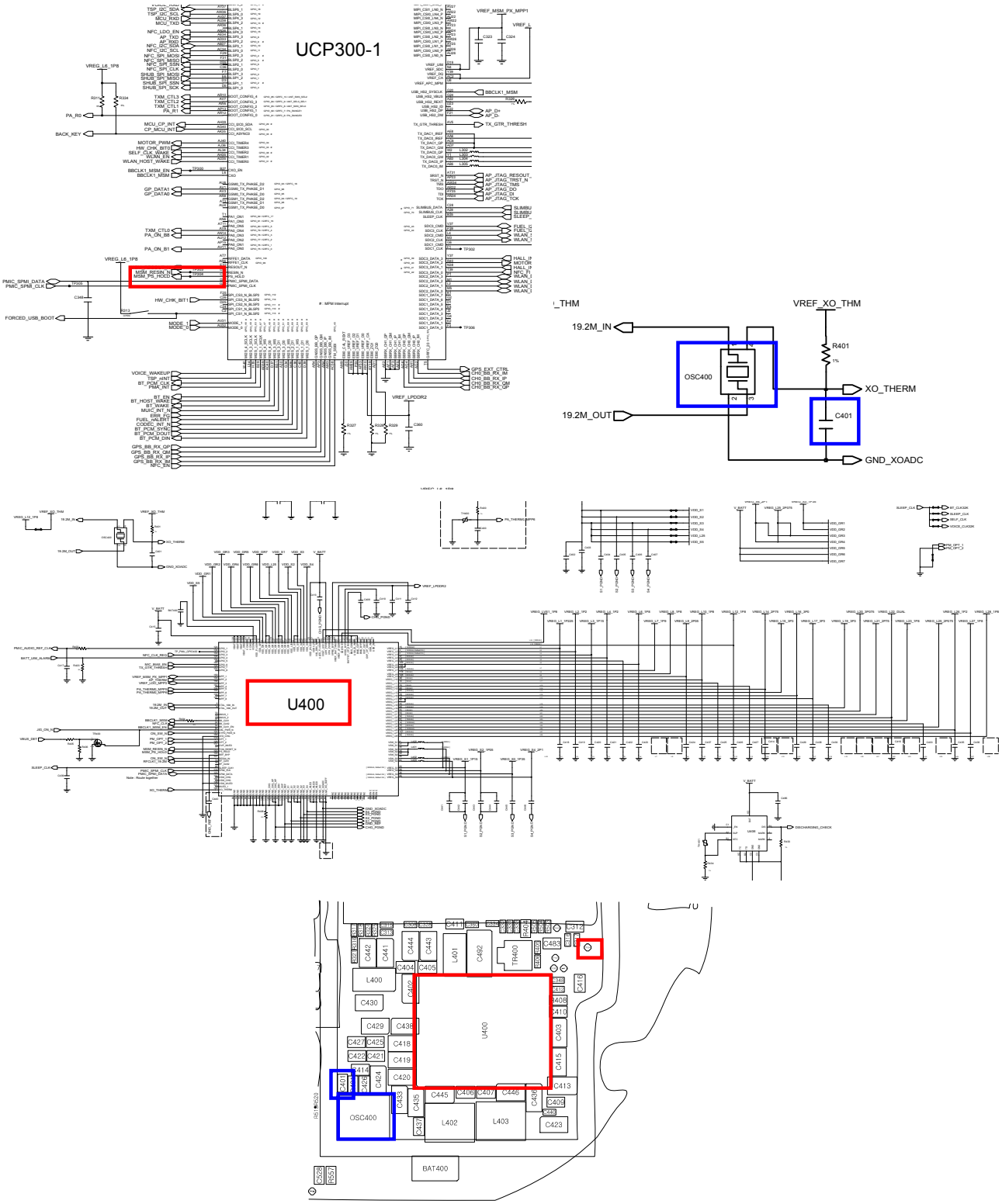

Confidential and proprietary-the contents in this service guide subject to change without prior notice.
Distribution, transmission, or infringement of any content or data from this document without Samsung's written authorization is strictly prohibited.

8-3-3. SIM Part

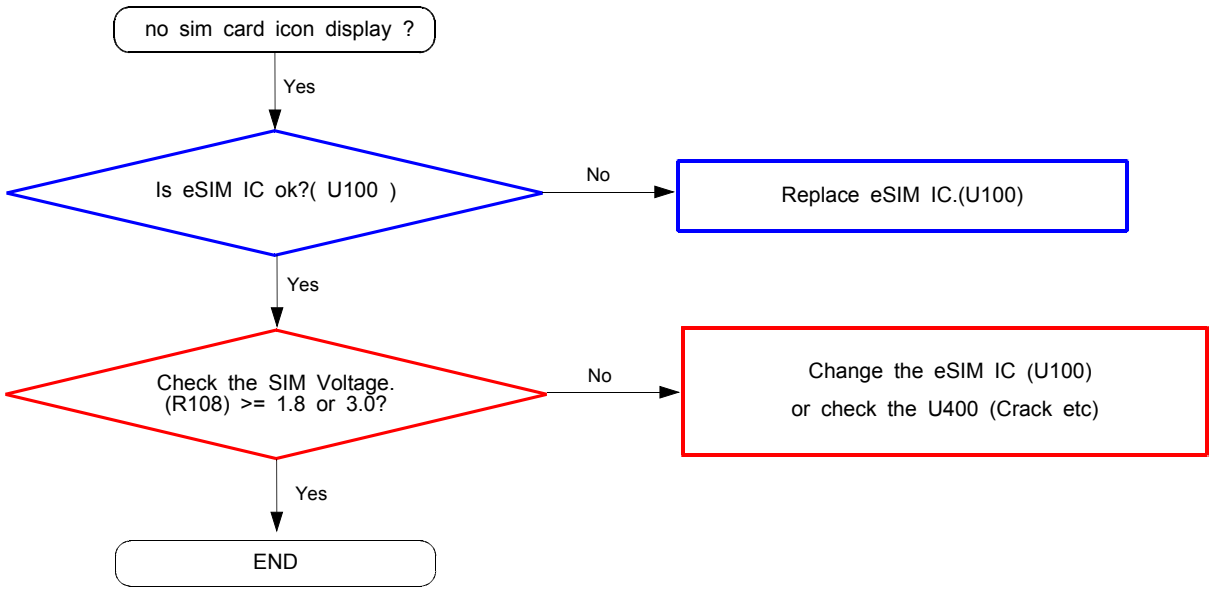

Confidential and proprietary-the contents in this service guide subject to change without prior notice.
Distribution, transmission, or infringement of any content or data from this document without Samsung's written authorization is strictly prohibited.

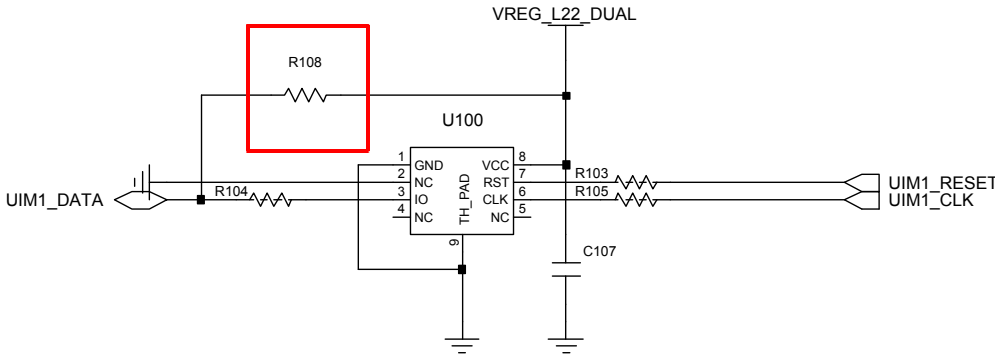

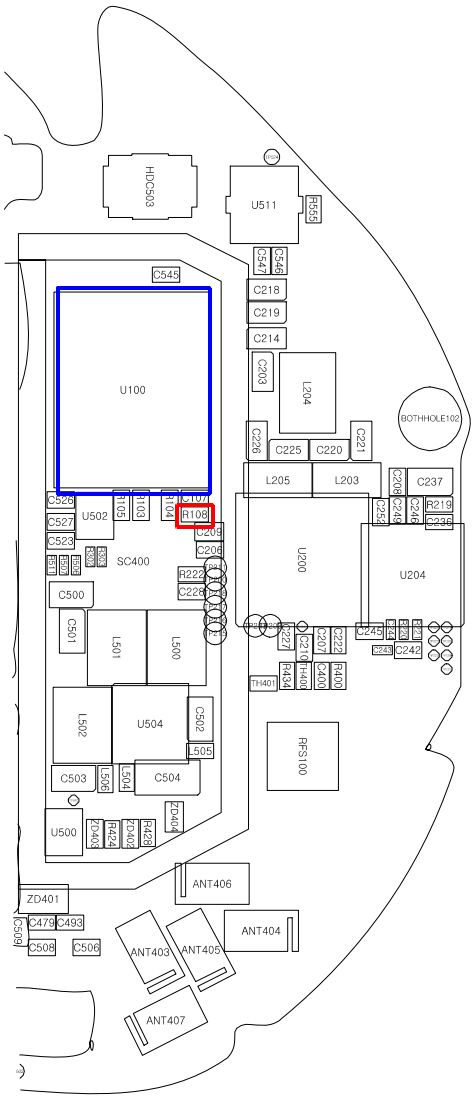

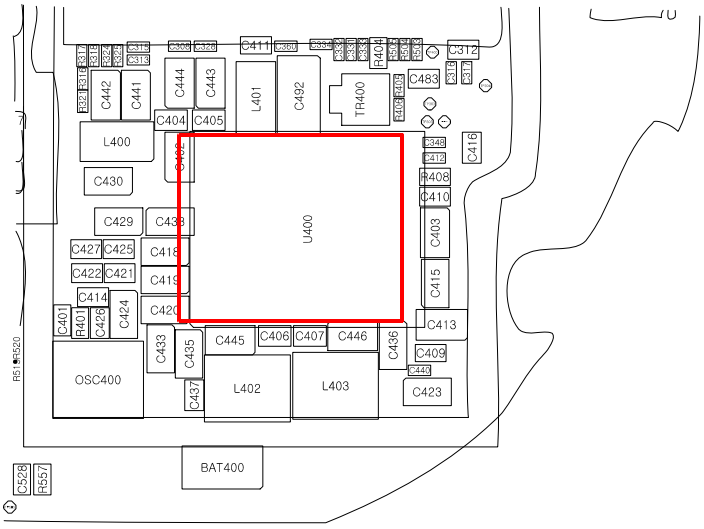

Confidential and proprietary-the contents in this service guide subject to change without prior notice.
Distribution, transmission, or infringement of any content or data from this document without Samsung's written authorization is strictly prohibited.

8-3-4. Charging Part

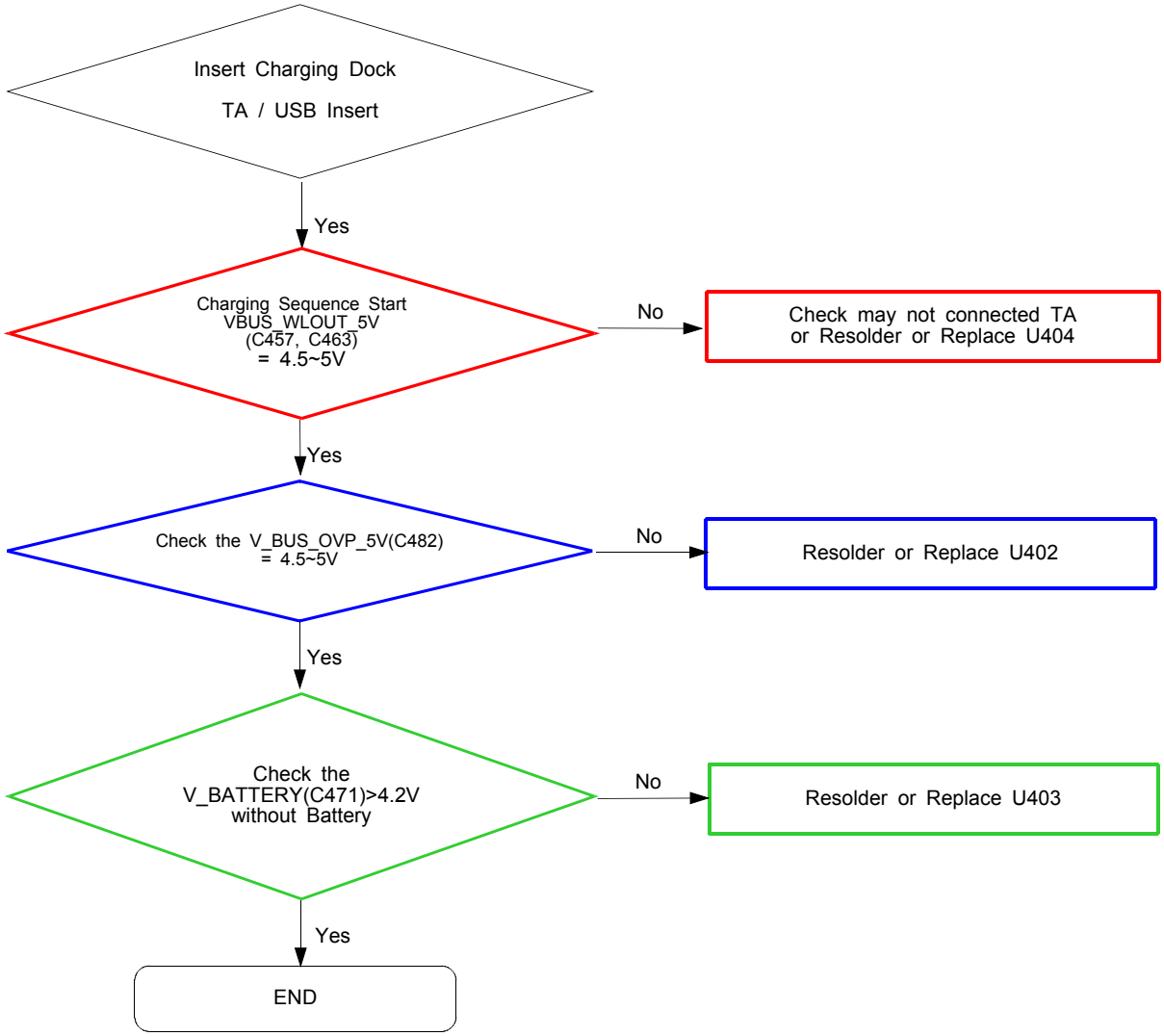

Confidential and proprietary-the contents in this service guide subject to change without prior notice.
Distribution, transmission, or infringement of any content or data from this document without Samsung's written authorization is strictly prohibited.

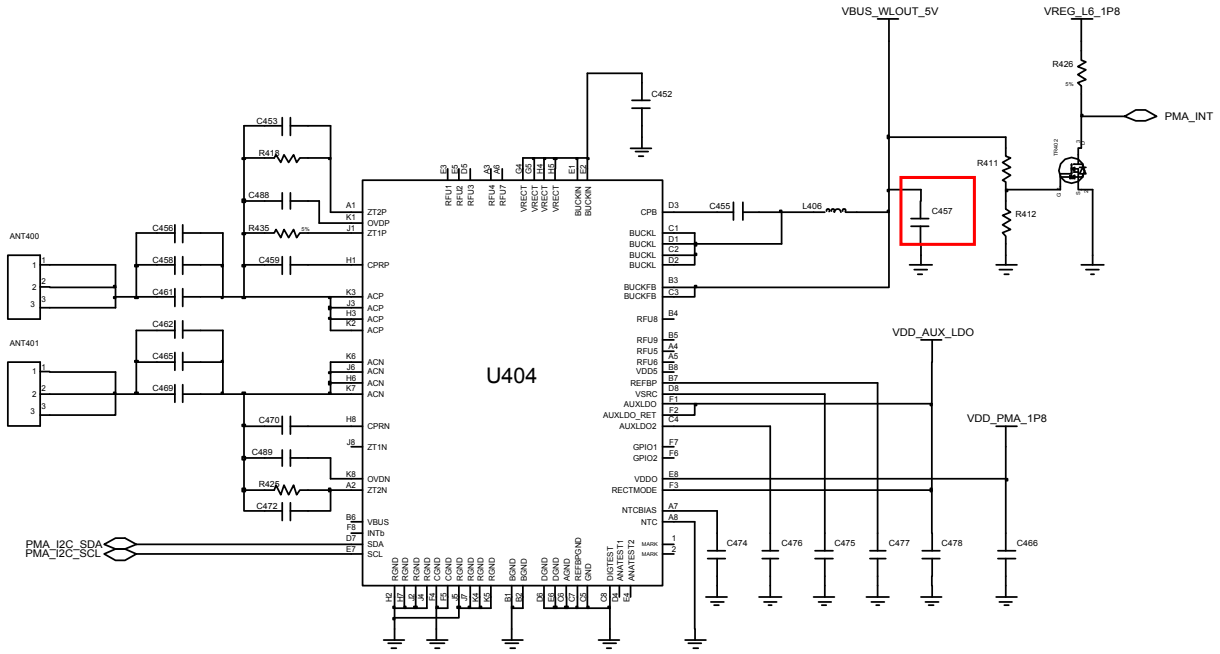

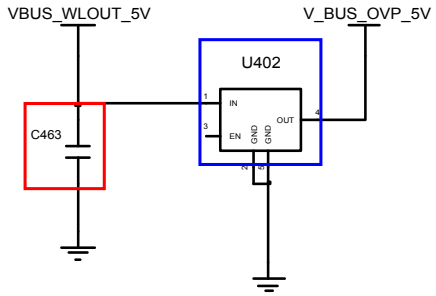

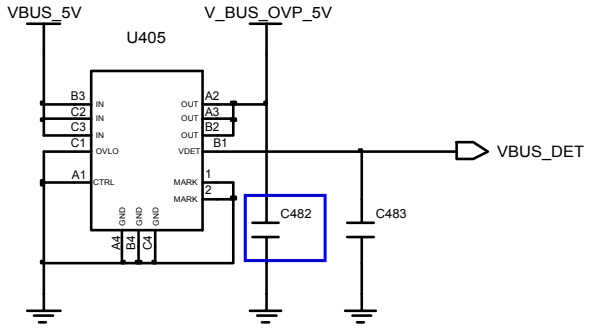

Confidential and proprietary-the contents in this service guide subject to change without prior notice.
Distribution, transmission, or infringement of any content or data from this document without Samsung's written authorization is strictly prohibited.

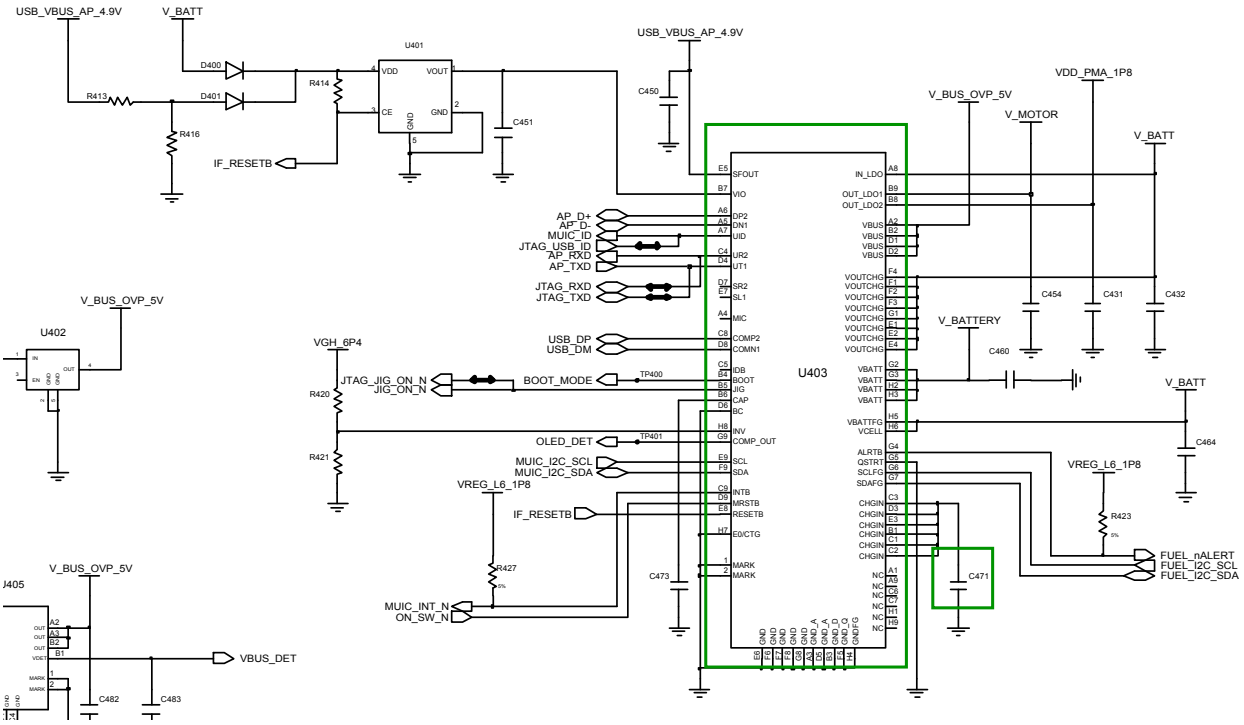

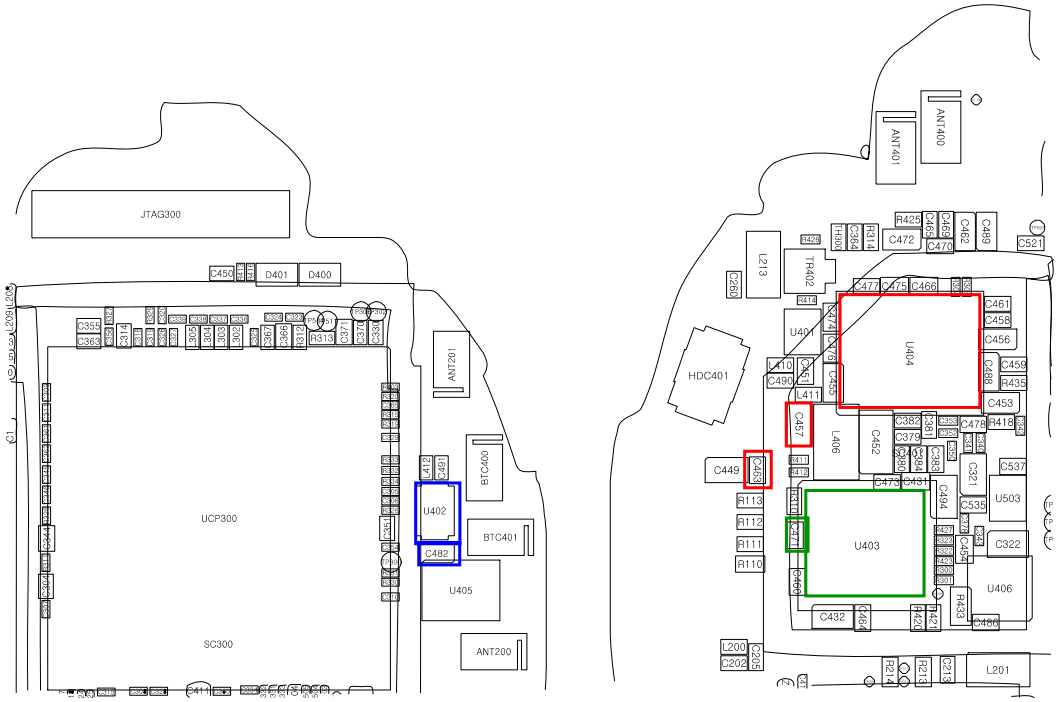

Confidential and proprietary-the contents in this service guide subject to change without prior notice.
Distribution, transmission, or infringement of any content or data from this document without Samsung's written authorization is strictly prohibited.

8-3-5. BT/WIFI

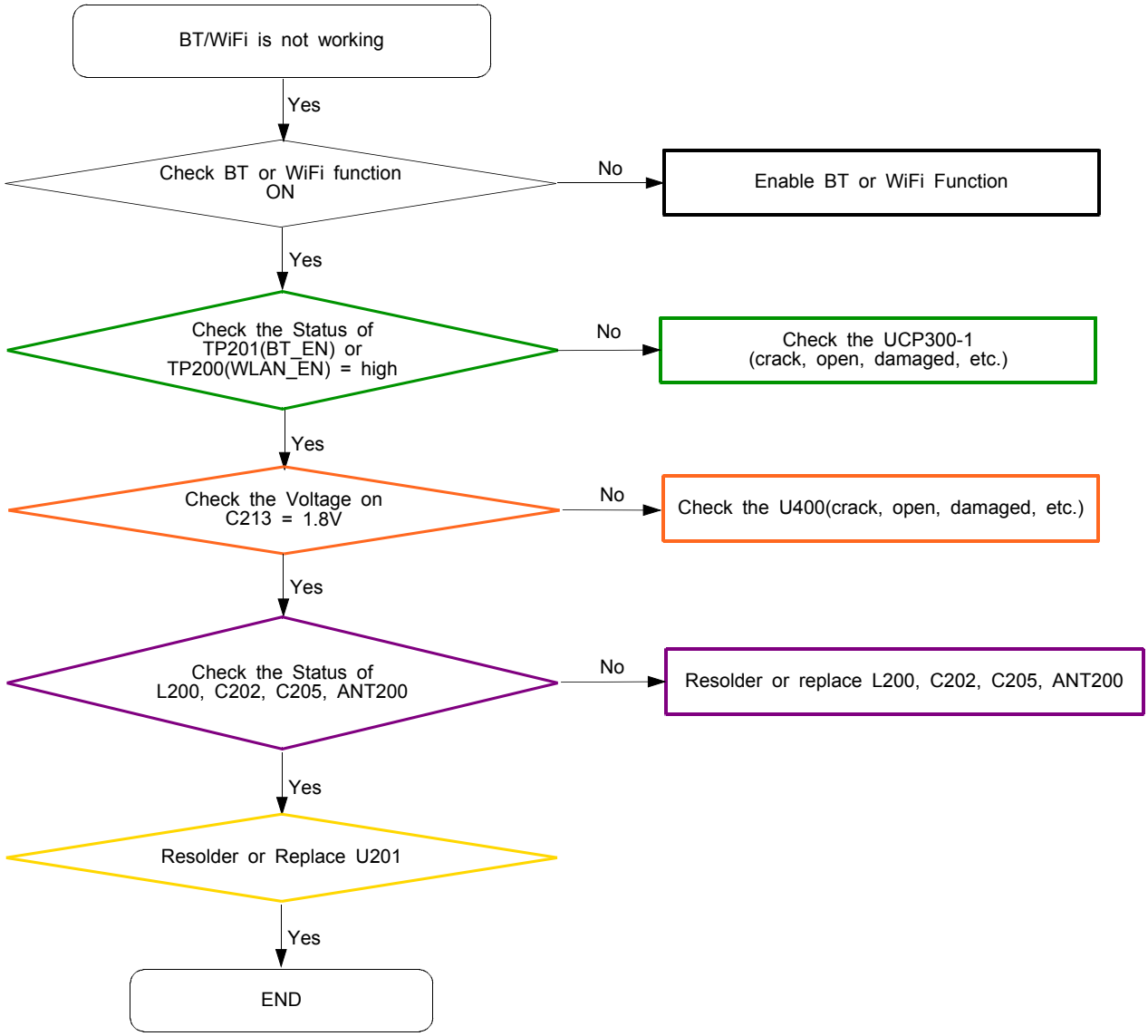

Confidential and proprietary-the contents in this service guide subject to change without prior notice.
Distribution, transmission, or infringement of any content or data from this document without Samsung's written authorization is strictly prohibited.

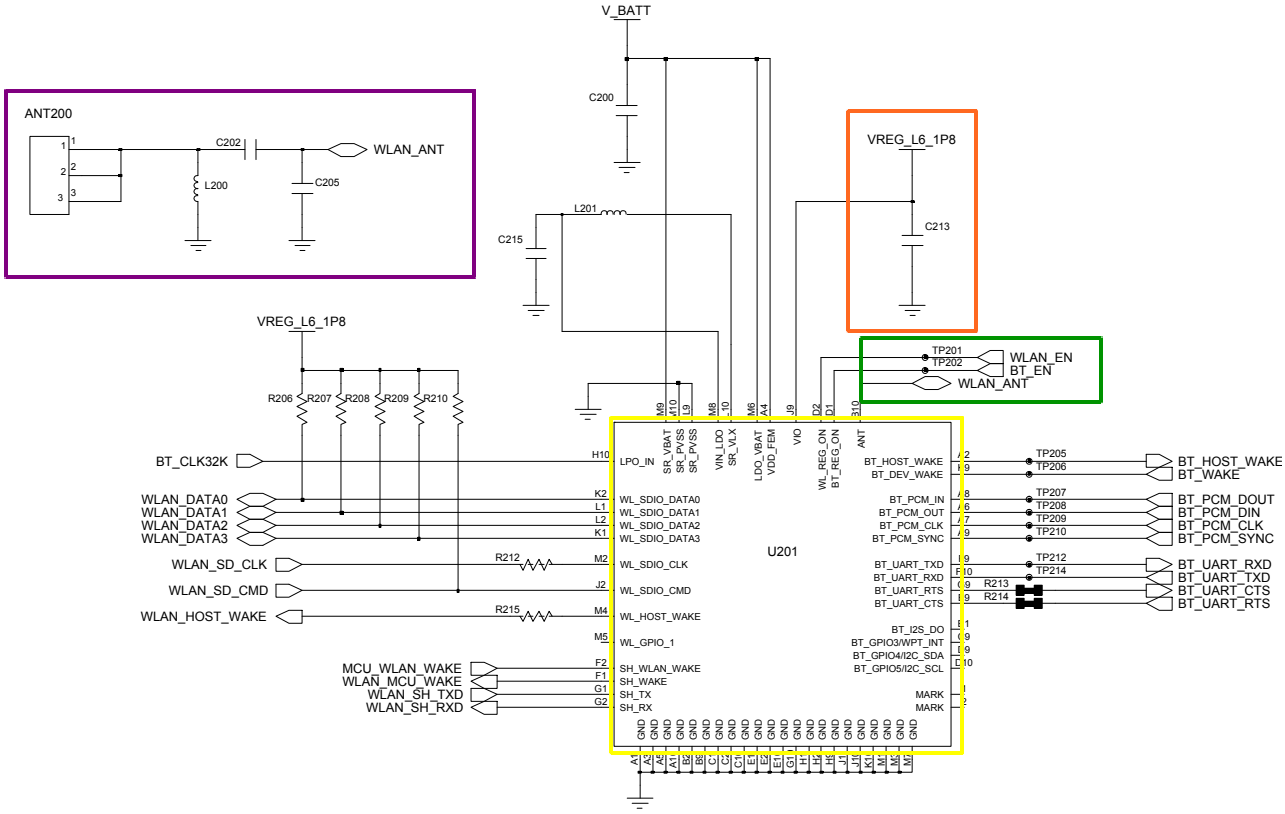

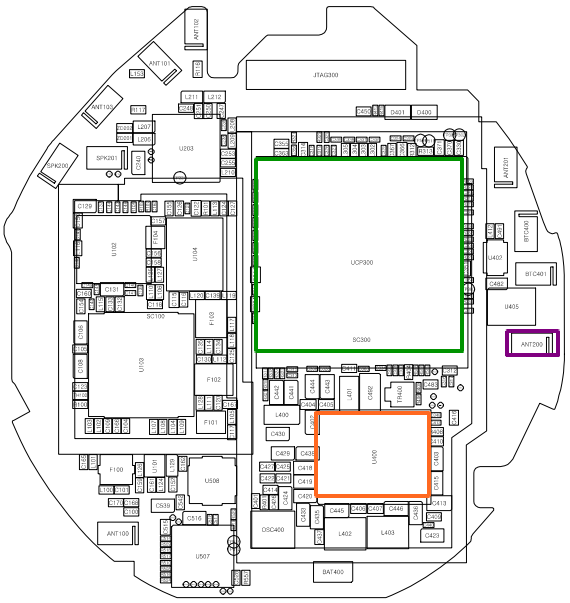

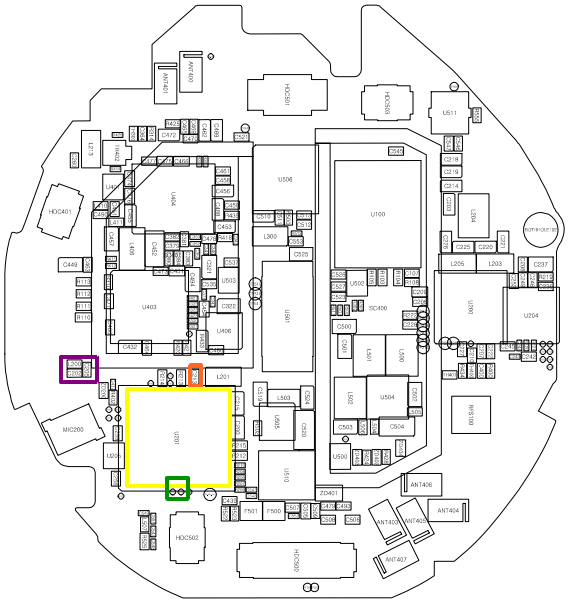

Confidential and proprietary-the contents in this service guide subject to change without prior notice.
Distribution, transmission, or infringement of any content or data from this document without Samsung's written authorization is strictly prohibited.

8-3-6. MOTOR

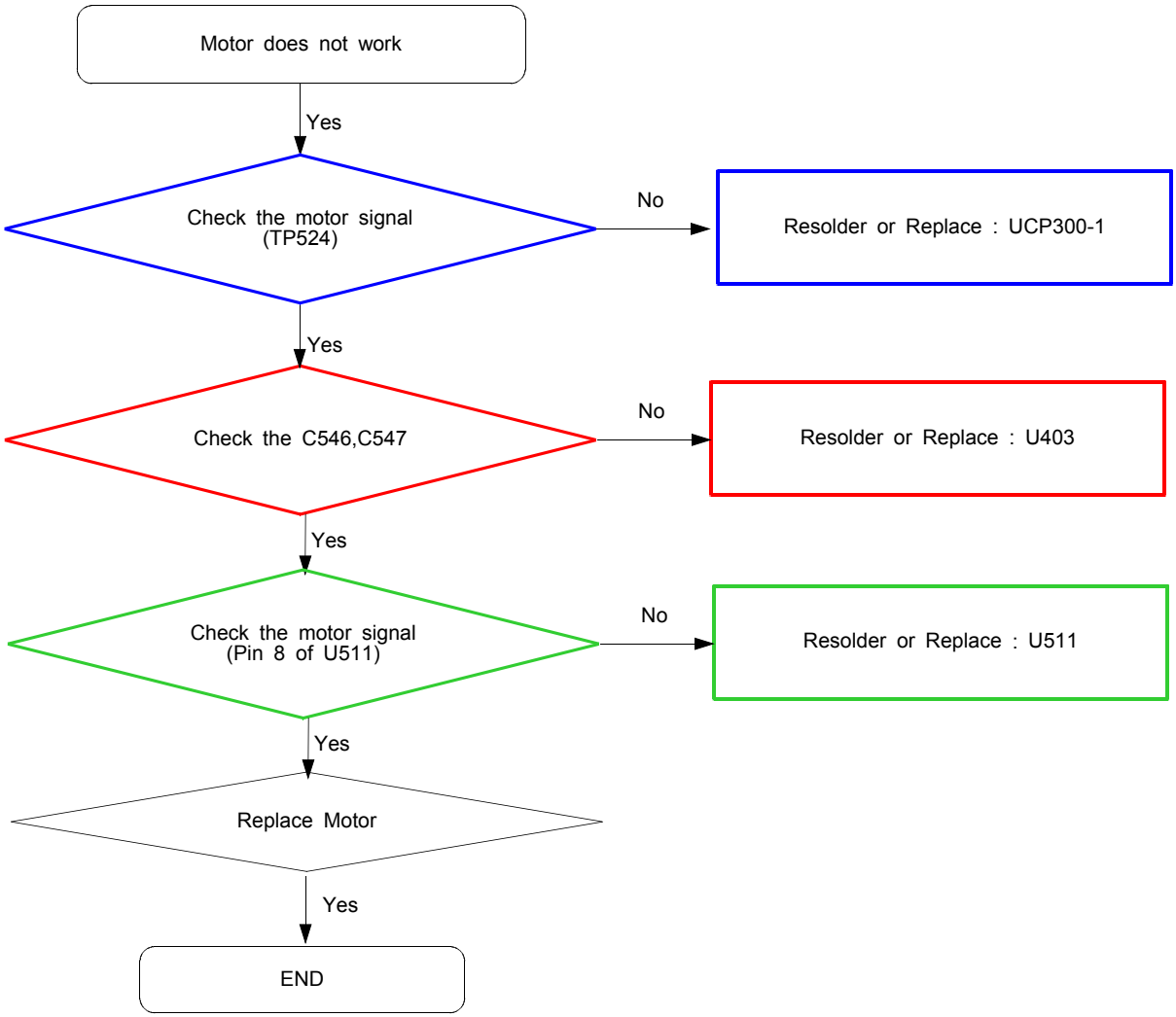

Confidential and proprietary-the contents in this service guide subject to change without prior notice.
Distribution, transmission, or infringement of any content or data from this document without Samsung's written authorization is strictly prohibited.

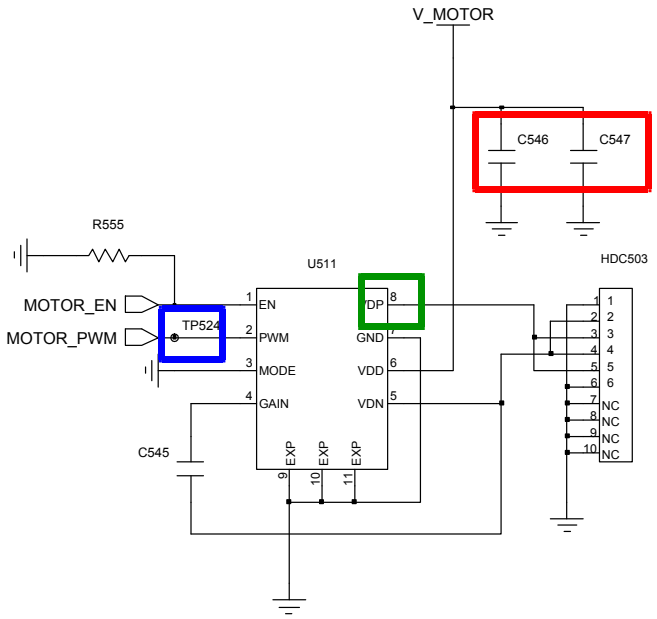

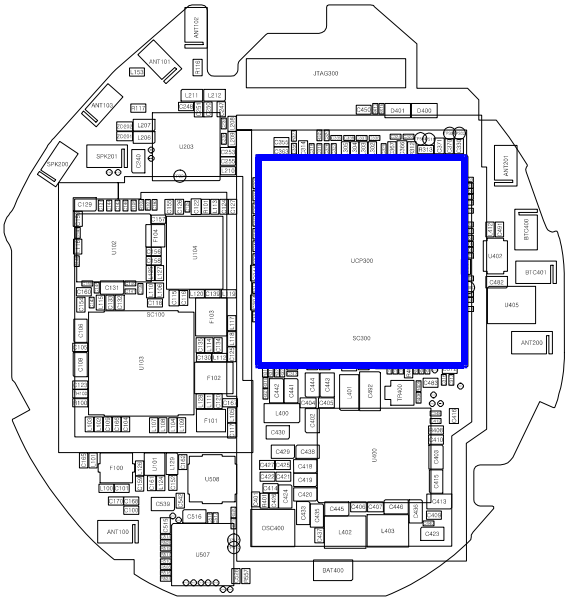

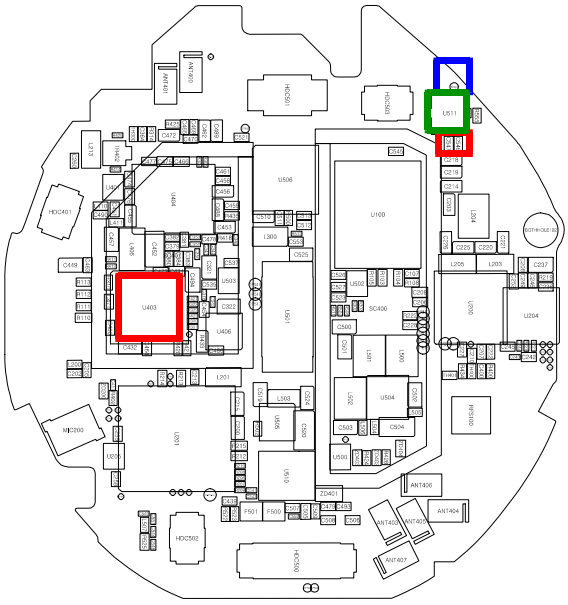

Confidential and proprietary-the contents in this service guide subject to change without prior notice.
Distribution, transmission, or infringement of any content or data from this document without Samsung's written authorization is strictly prohibited.

8-3-7. LCD

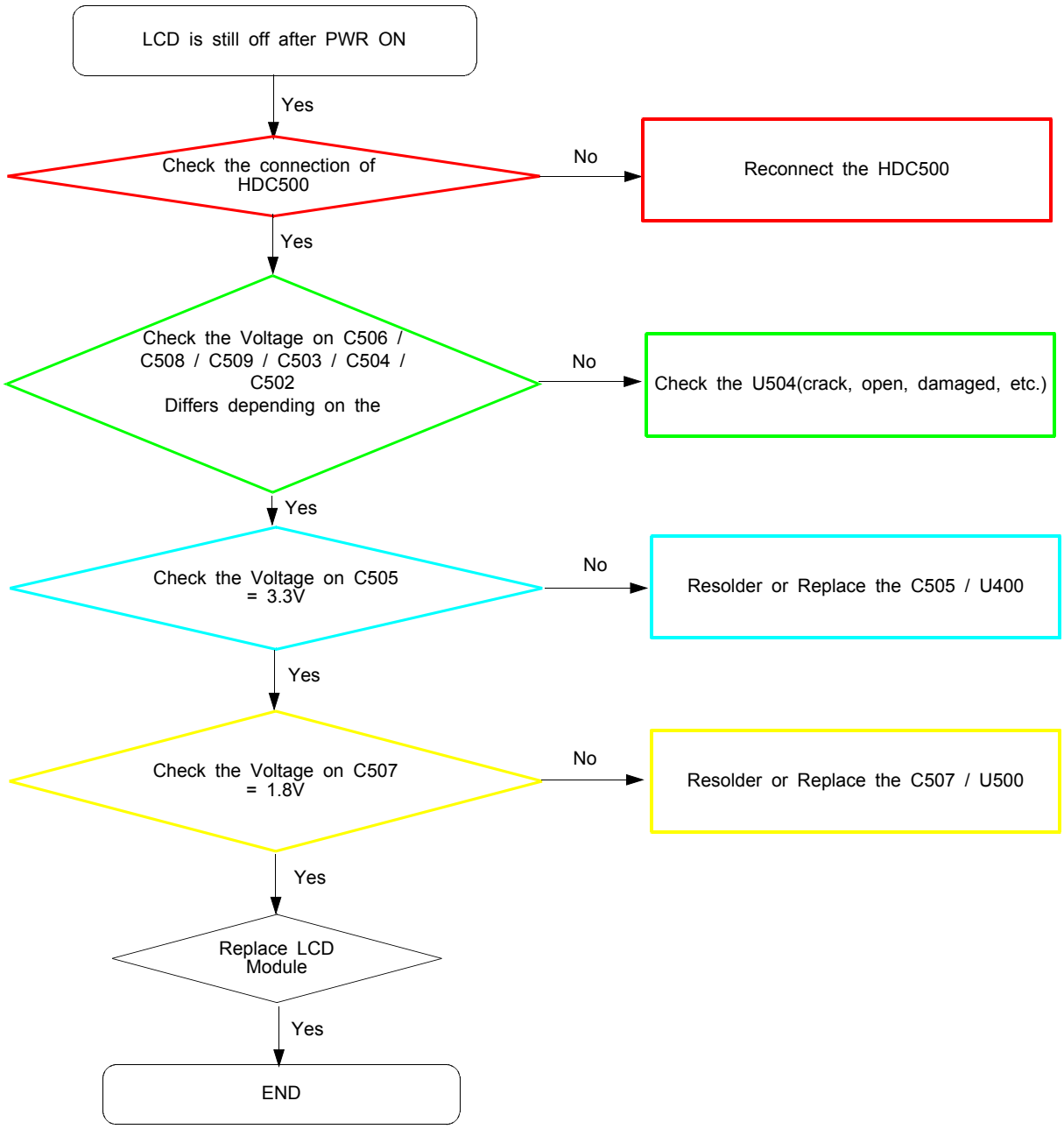

Confidential and proprietary-the contents in this service guide subject to change without prior notice.
Distribution, transmission, or infringement of any content or data from this document without Samsung's written authorization is strictly prohibited.

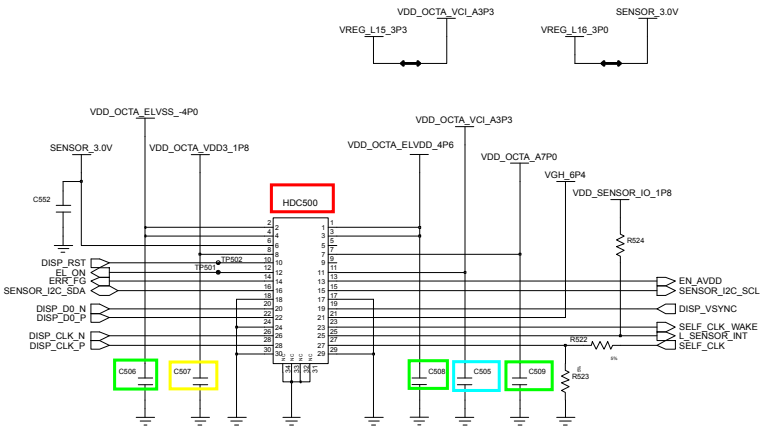

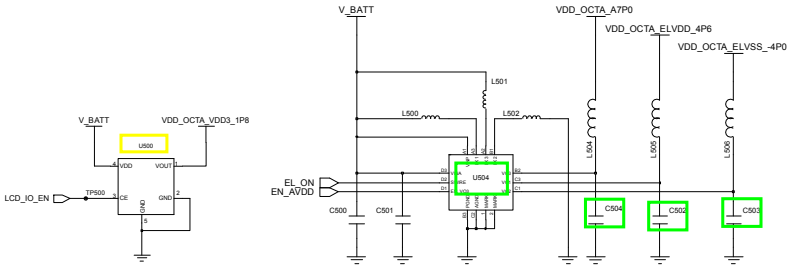

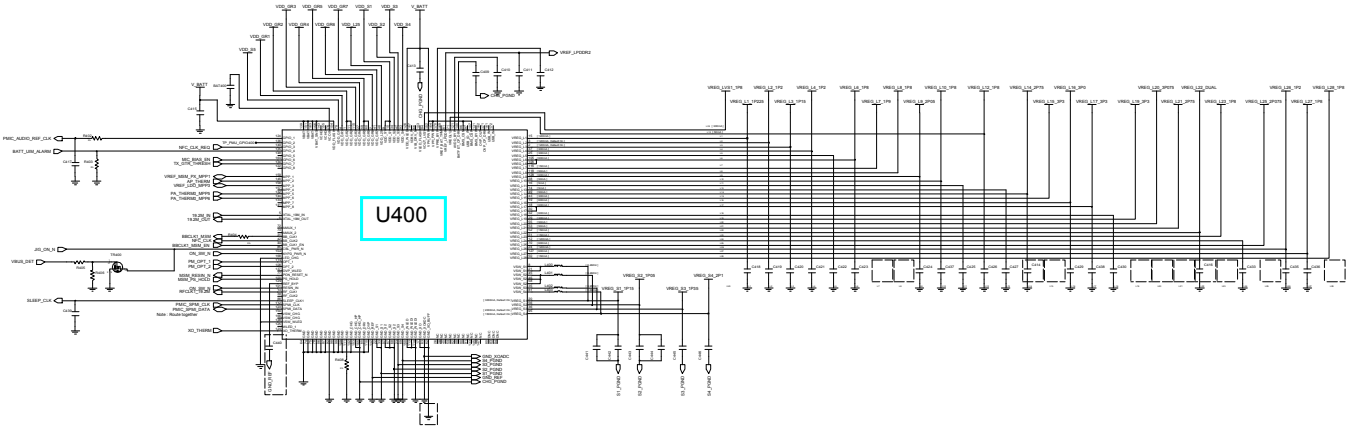

Confidential and proprietary-the contents in this service guide subject to change without prior notice.
Distribution, transmission, or infringement of any content or data from this document without Samsung's written authorization is strictly prohibited.

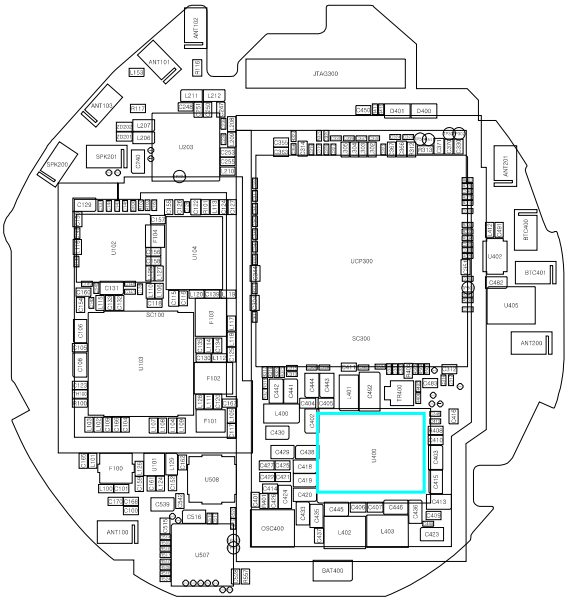

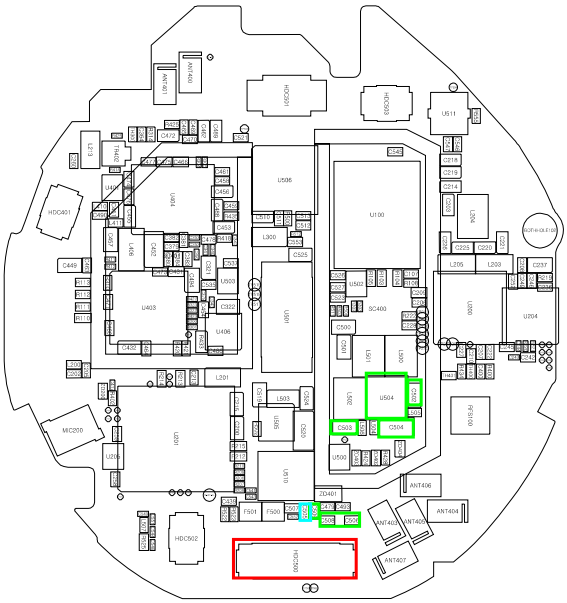

Confidential and proprietary-the contents in this service guide subject to change without prior notice.
Distribution, transmission, or infringement of any content or data from this document without Samsung's written authorization is strictly prohibited.

8-3-8. TSP

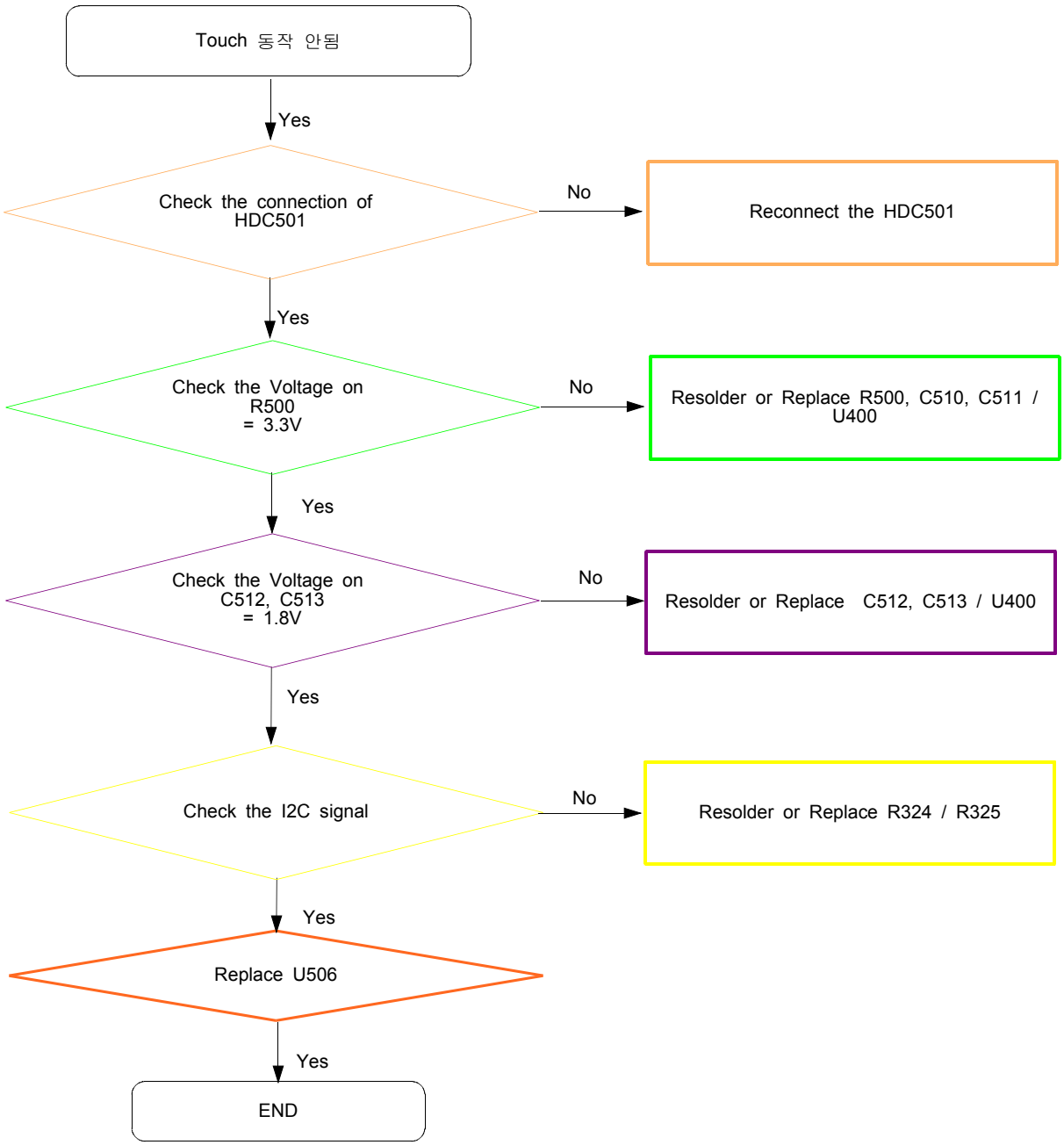

Confidential and proprietary-the contents in this service guide subject to change without prior notice.
Distribution, transmission, or infringement of any content or data from this document without Samsung's written authorization is strictly prohibited.

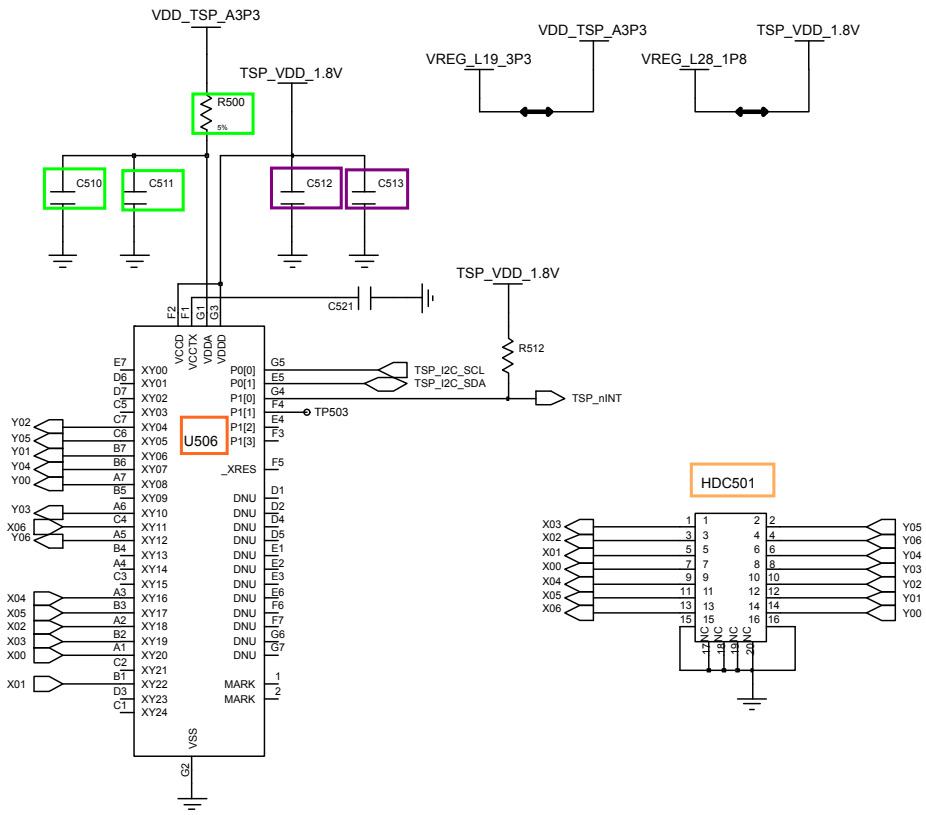

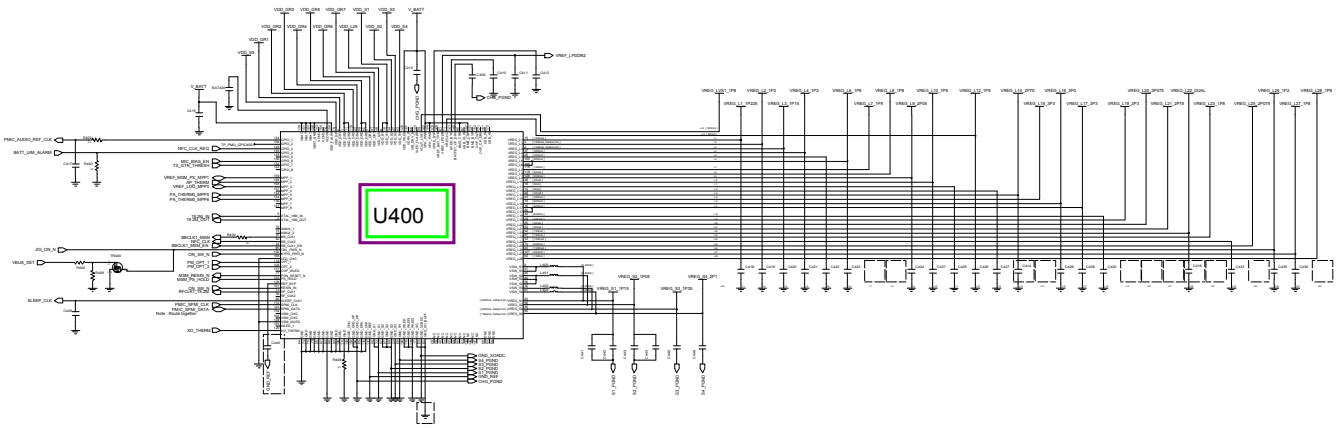

Confidential and proprietary-the contents in this service guide subject to change without prior notice.
Distribution, transmission, or infringement of any content or data from this document without Samsung's written authorization is strictly prohibited.

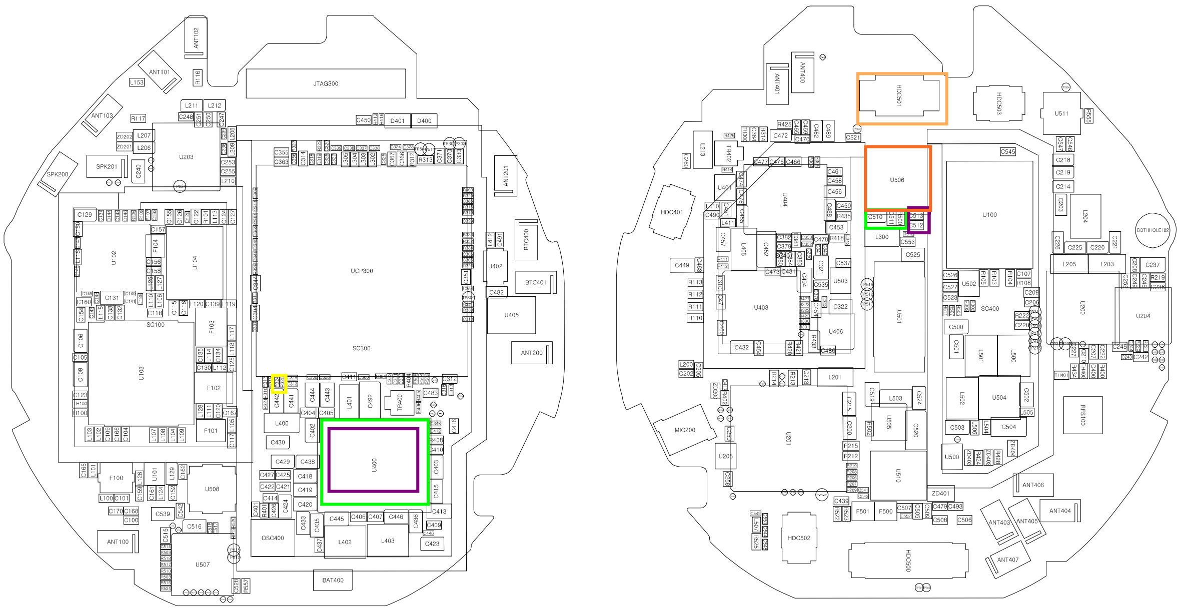

Confidential and proprietary-the contents in this service guide subject to change without prior notice.
Distribution, transmission, or infringement of any content or data from this document without Samsung's written authorization is strictly prohibited.

8-3-9. WCDMA BAND2 TX

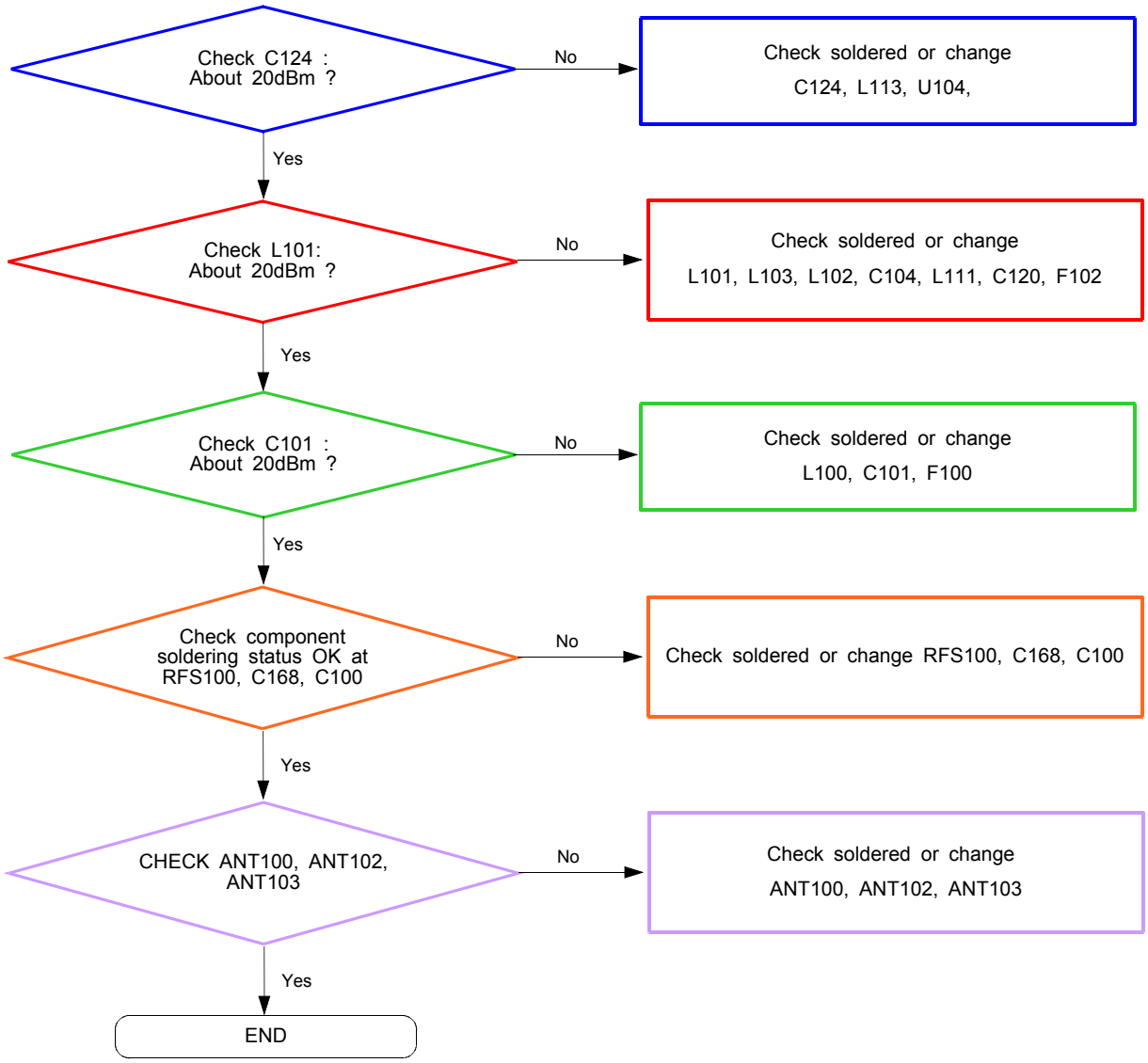

Confidential and proprietary-the contents in this service guide subject to change without prior notice.
Distribution, transmission, or infringement of any content or data from this document without Samsung's written authorization is strictly prohibited.

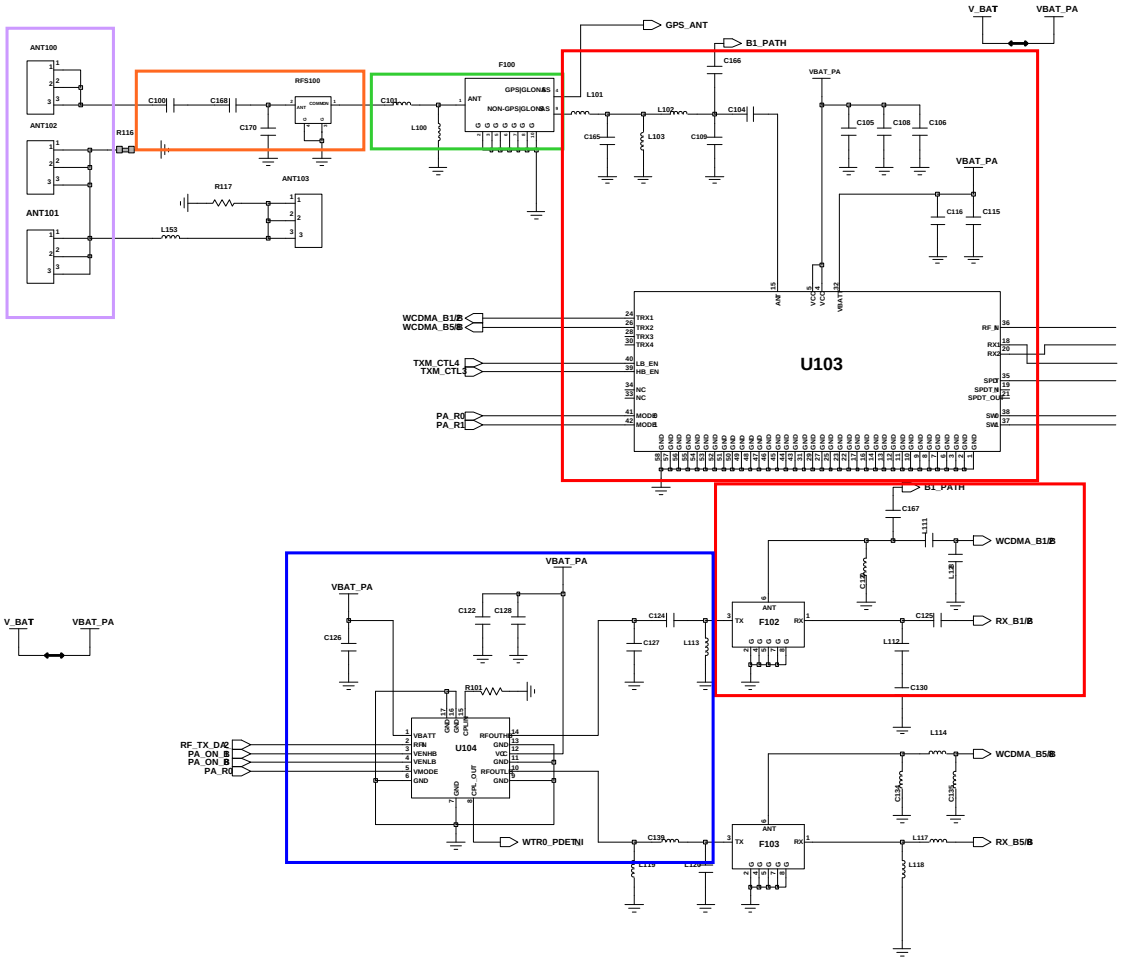

Confidential and proprietary-the contents in this service guide subject to change without prior notice.
Distribution, transmission, or infringement of any content or data from this document without Samsung's written authorization is strictly prohibited.

8-3-10. WCDMA BAND5 TX

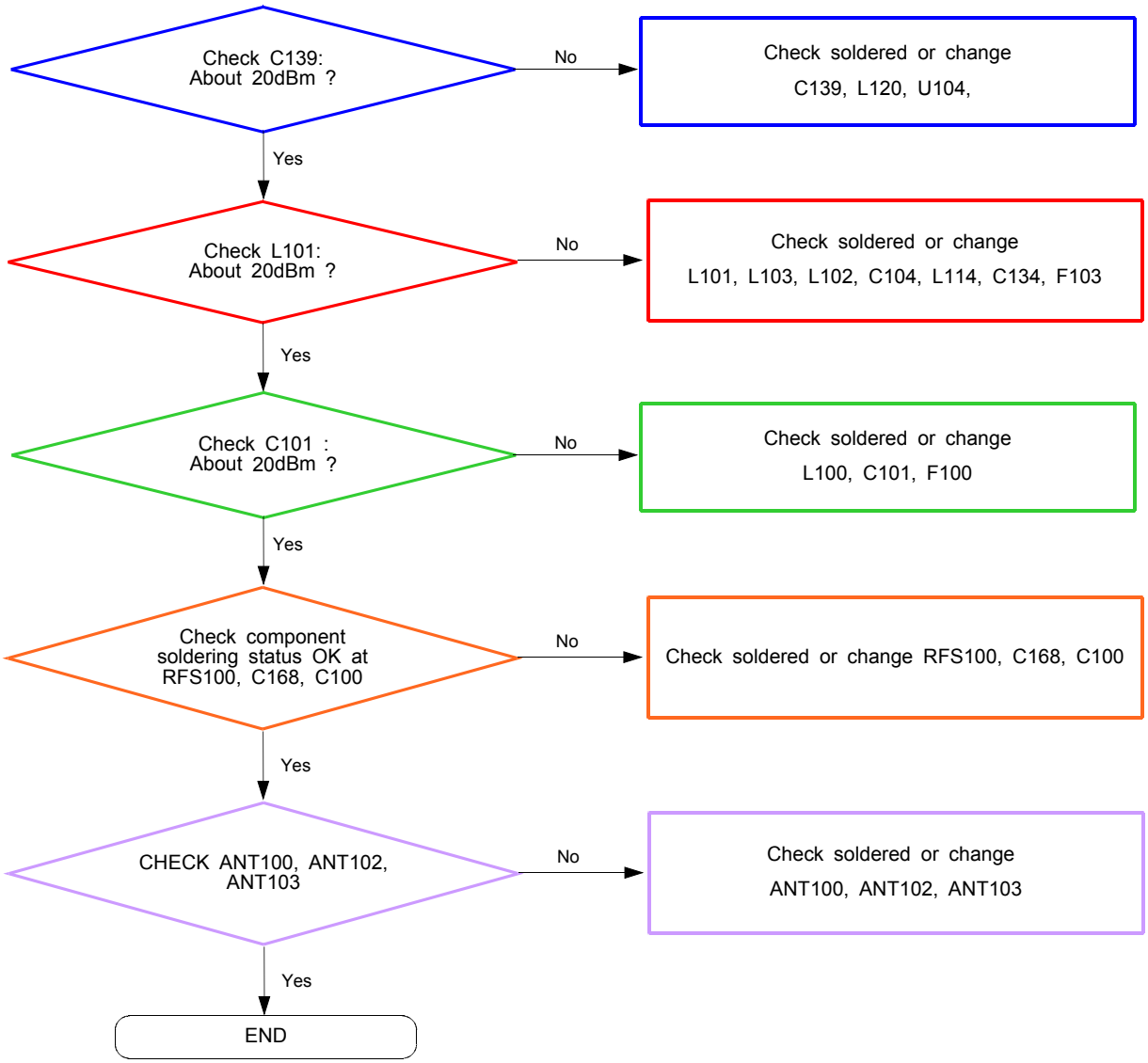

Confidential and proprietary-the contents in this service guide subject to change without prior notice.
Distribution, transmission, or infringement of any content or data from this document without Samsung's written authorization is strictly prohibited.

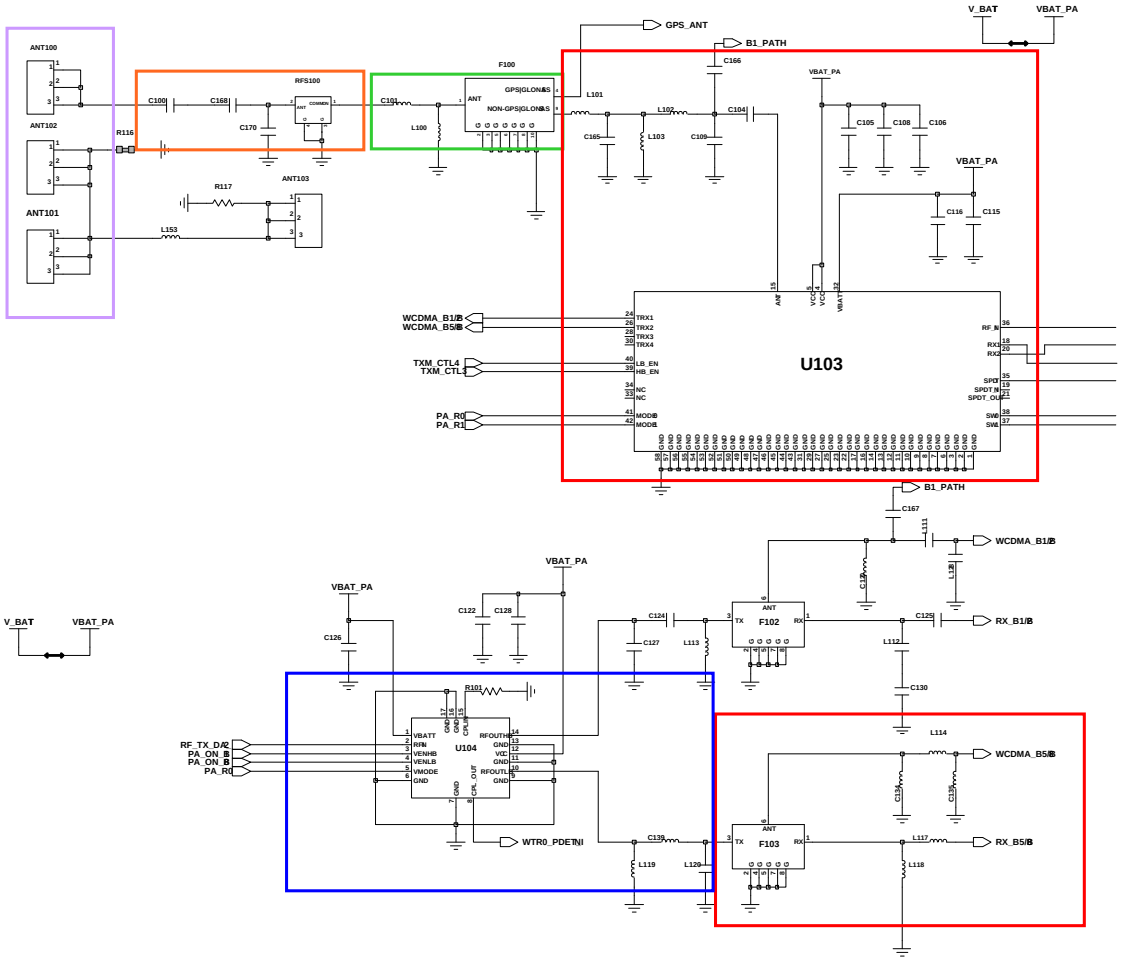

Confidential and proprietary-the contents in this service guide subject to change without prior notice.
Distribution, transmission, or infringement of any content or data from this document without Samsung's written authorization is strictly prohibited.

8-3-11. GSM900/GSM1800 TX

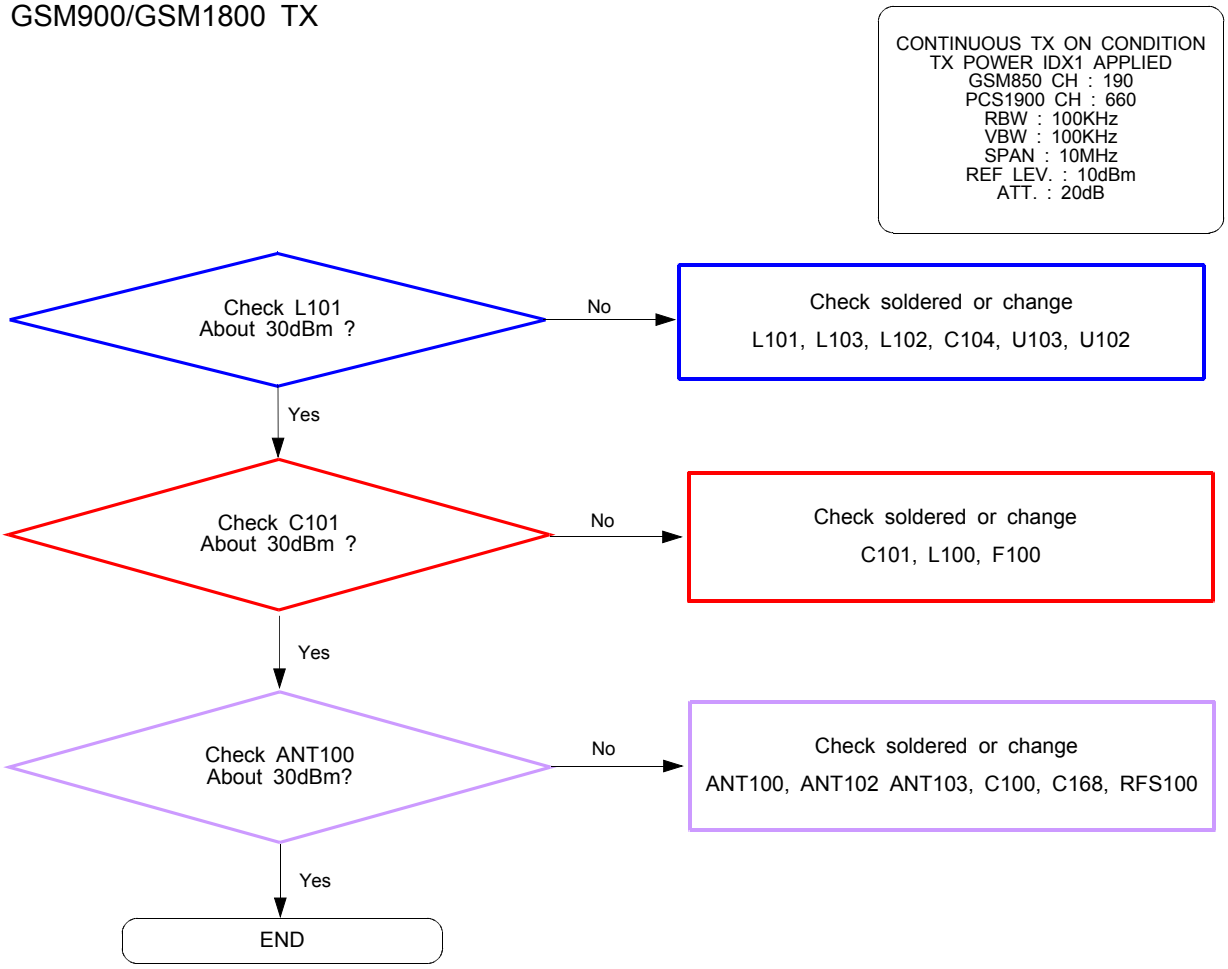

Confidential and proprietary-the contents in this service guide subject to change without prior notice.
Distribution, transmission, or infringement of any content or data from this document without Samsung's written authorization is strictly prohibited.

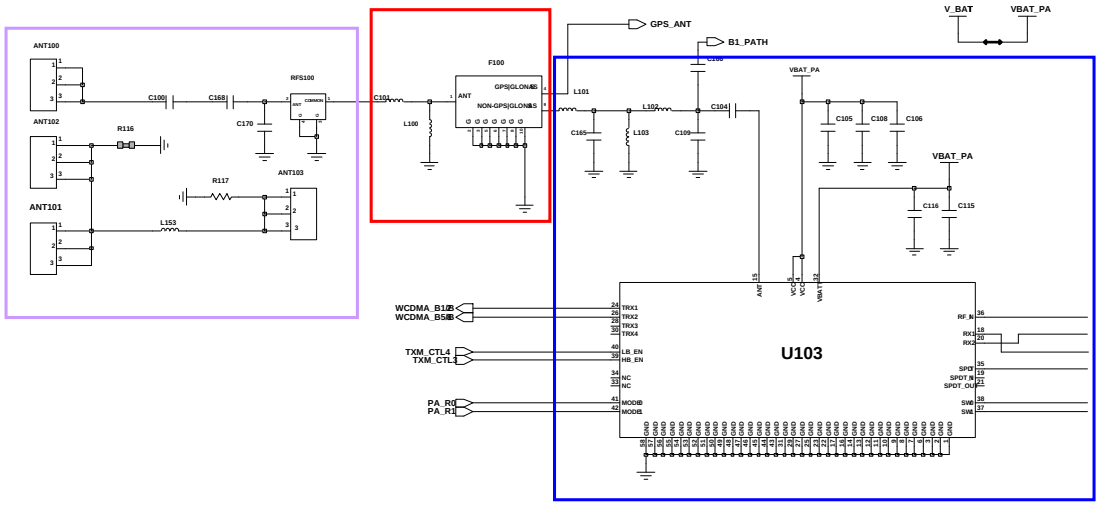

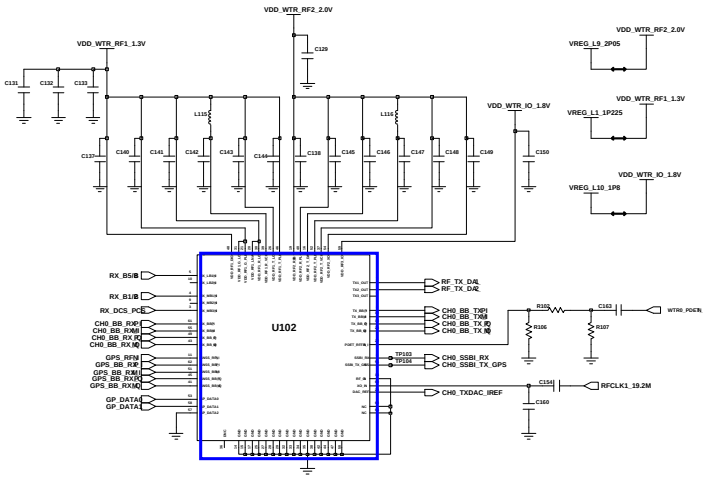

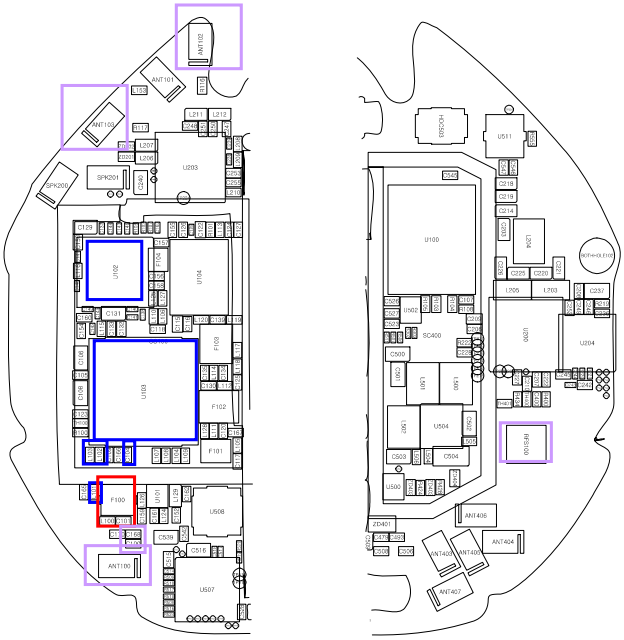

Confidential and proprietary-the contents in this service guide subject to change without prior notice.
Distribution, transmission, or infringement of any content or data from this document without Samsung's written authorization is strictly prohibited.

8-3-12. WCDMA BAND2 RX

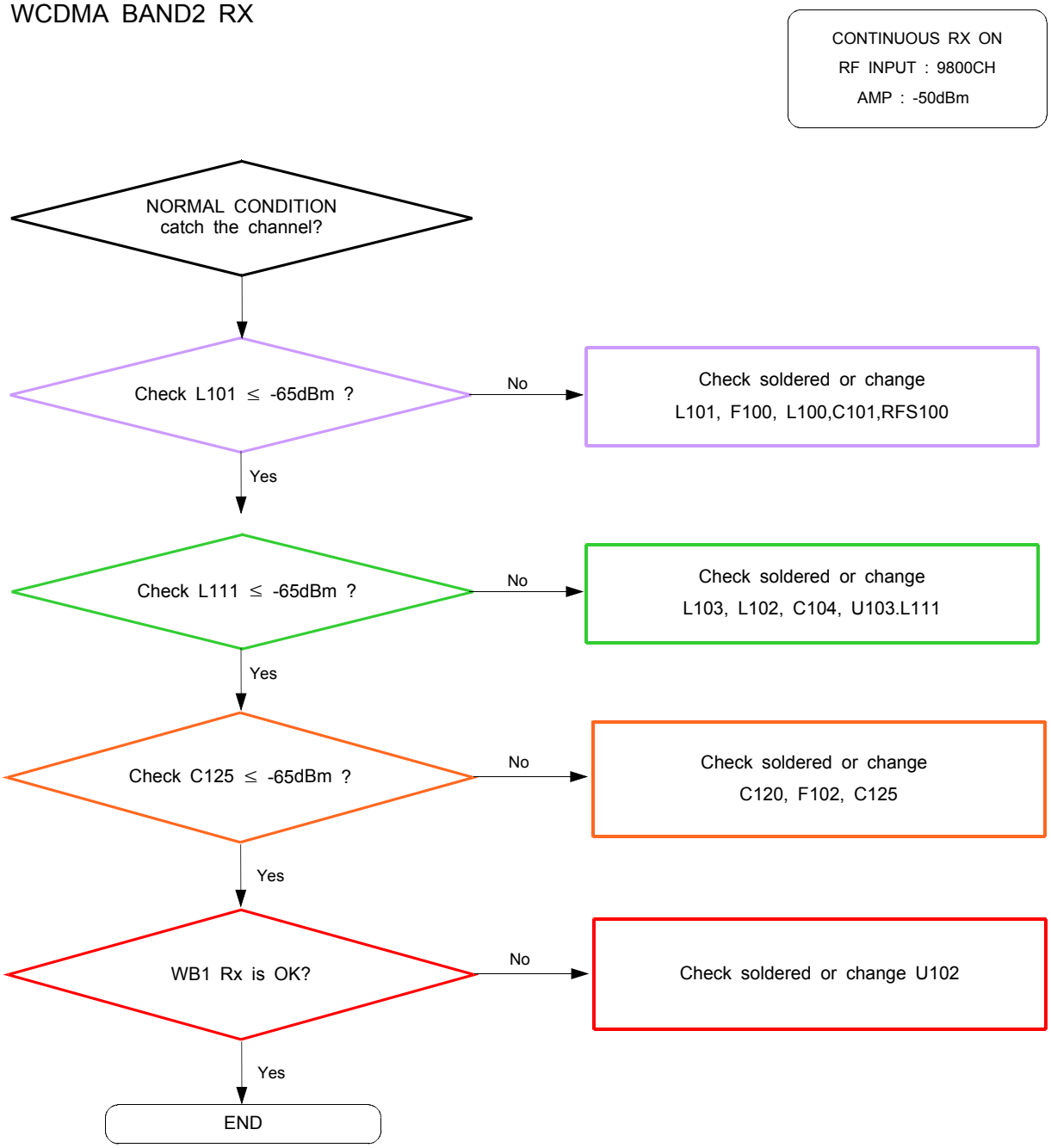

Confidential and proprietary-the contents in this service guide subject to change without prior notice.
Distribution, transmission, or infringement of any content or data from this document without Samsung's written authorization is strictly prohibited.

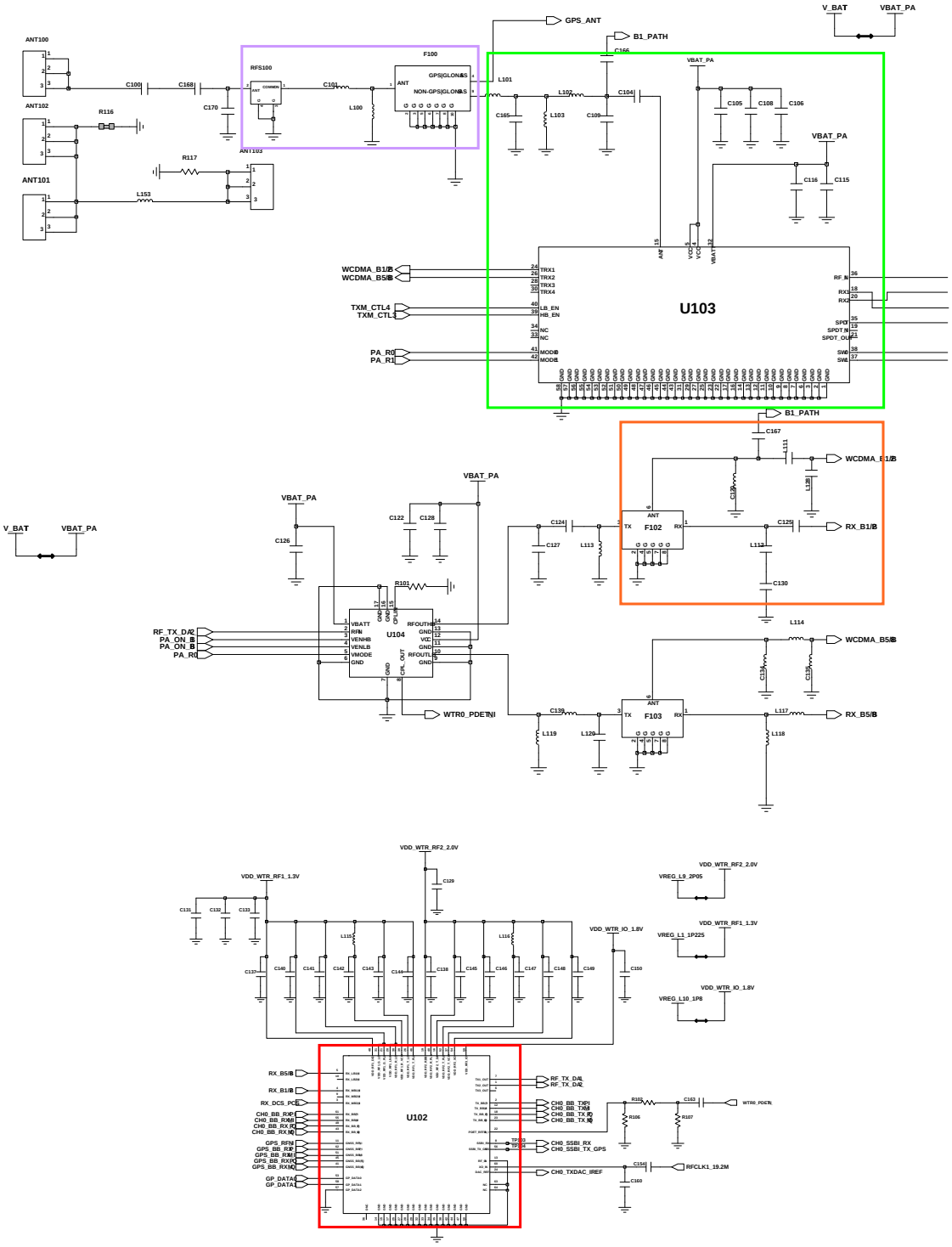

Confidential and proprietary-the contents in this service guide subject to change without prior notice.
Distribution, transmission, or infringement of any content or data from this document without Samsung's written authorization is strictly prohibited.

Confidential and proprietary-the contents in this service guide subject to change without prior notice.
Distribution, transmission, or infringement of any content or data from this document without Samsung's written authorization is strictly prohibited.

8-3-13. WCDMA BAND8/GSM900 RX

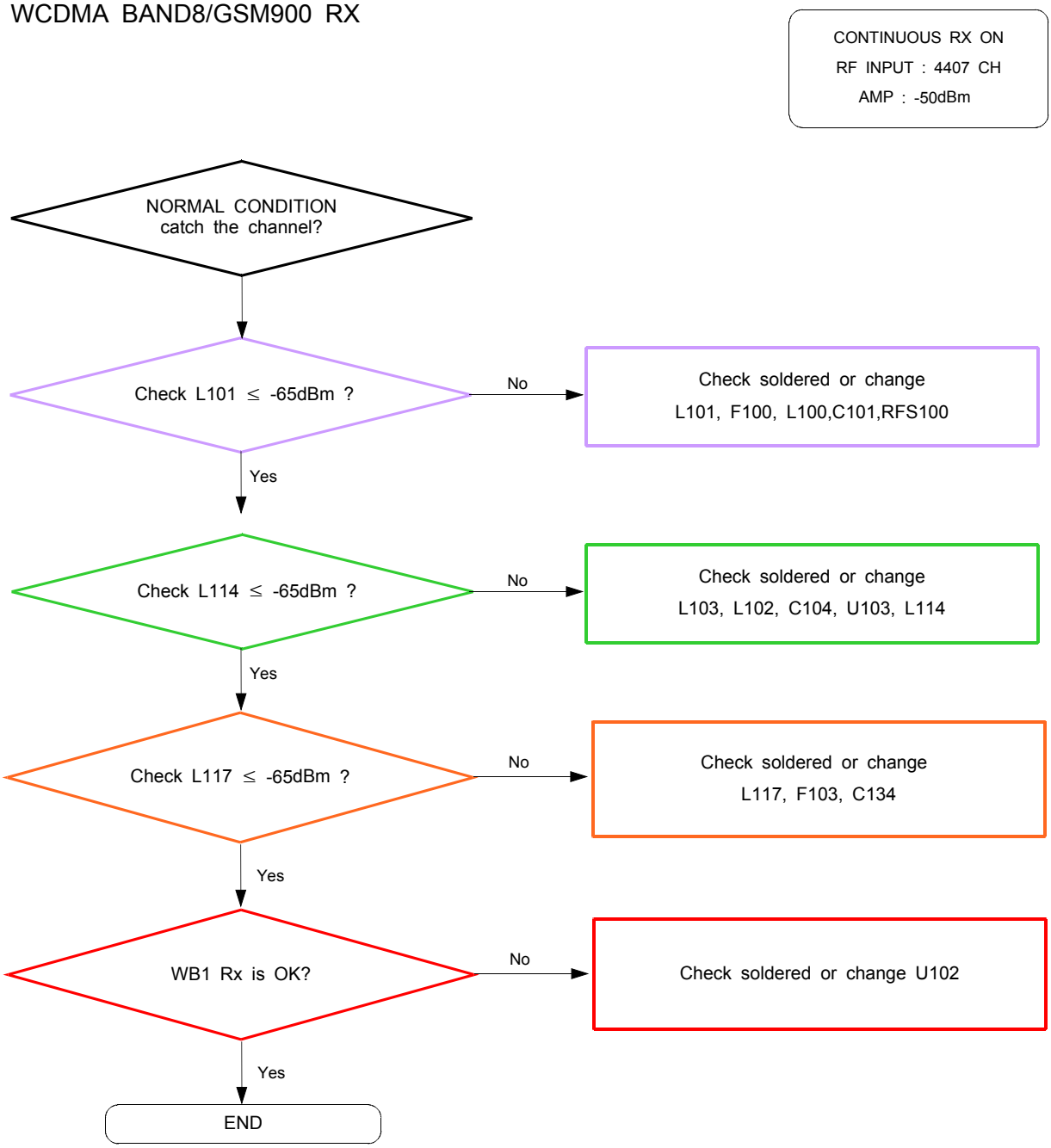

Confidential and proprietary-the contents in this service guide subject to change without prior notice.
Distribution, transmission, or infringement of any content or data from this document without Samsung's written authorization is strictly prohibited.

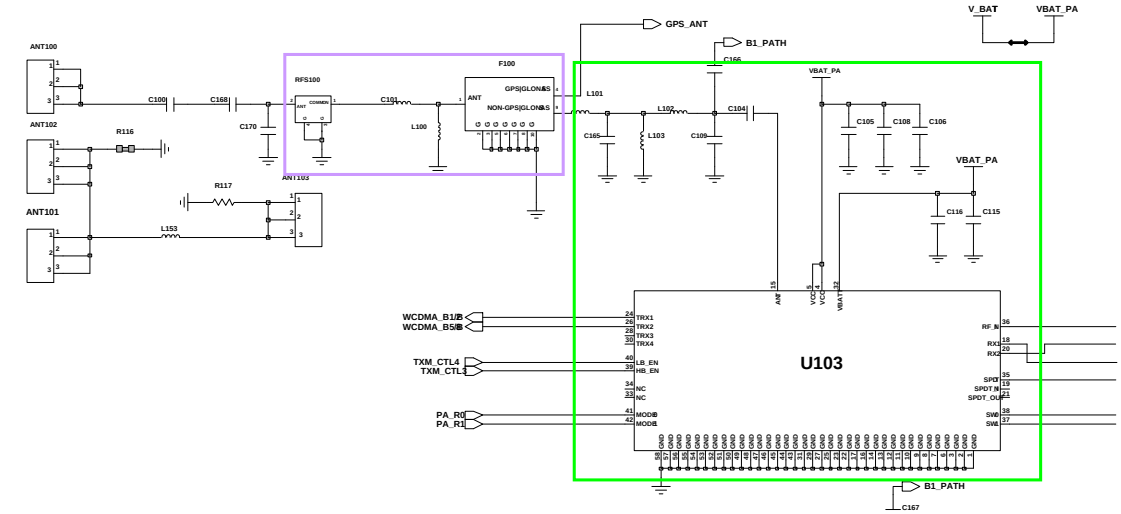

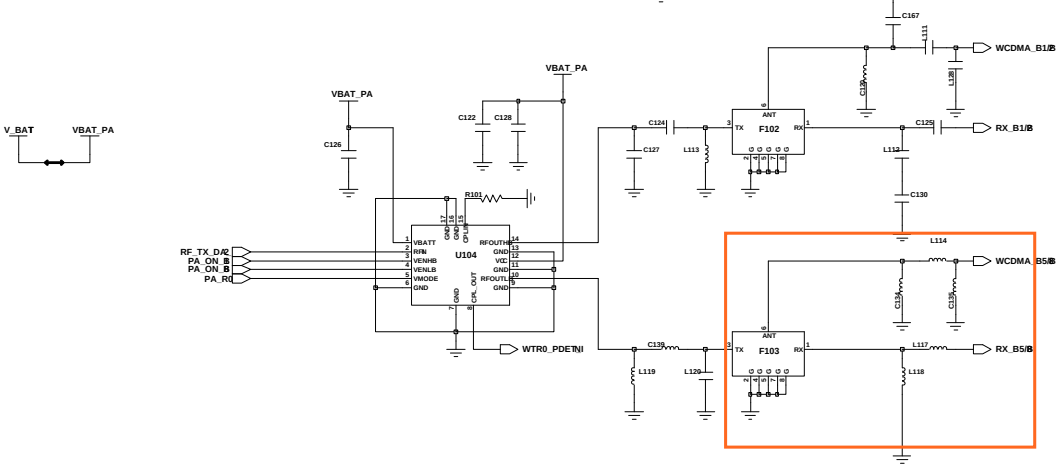

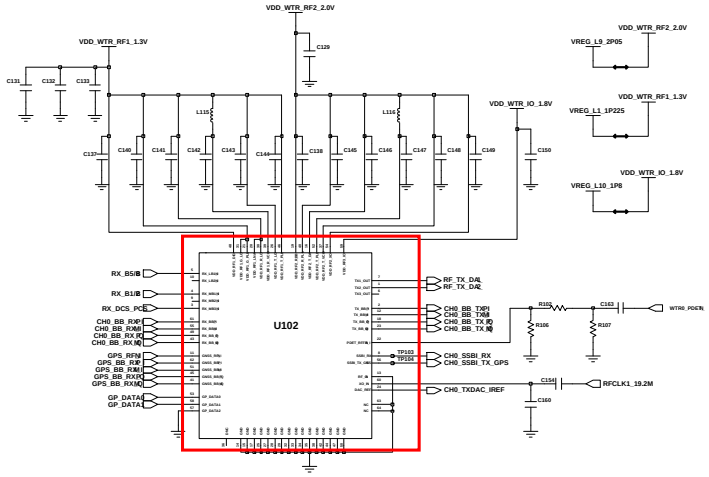

Confidential and proprietary-the contents in this service guide subject to change without prior notice.
Distribution, transmission, or infringement of any content or data from this document without Samsung's written authorization is strictly prohibited.

Confidential and proprietary-the contents in this service guide subject to change without prior notice.
Distribution, transmission, or infringement of any content or data from this document without Samsung's written authorization is strictly prohibited.

8-3-14. PCS1900 RX

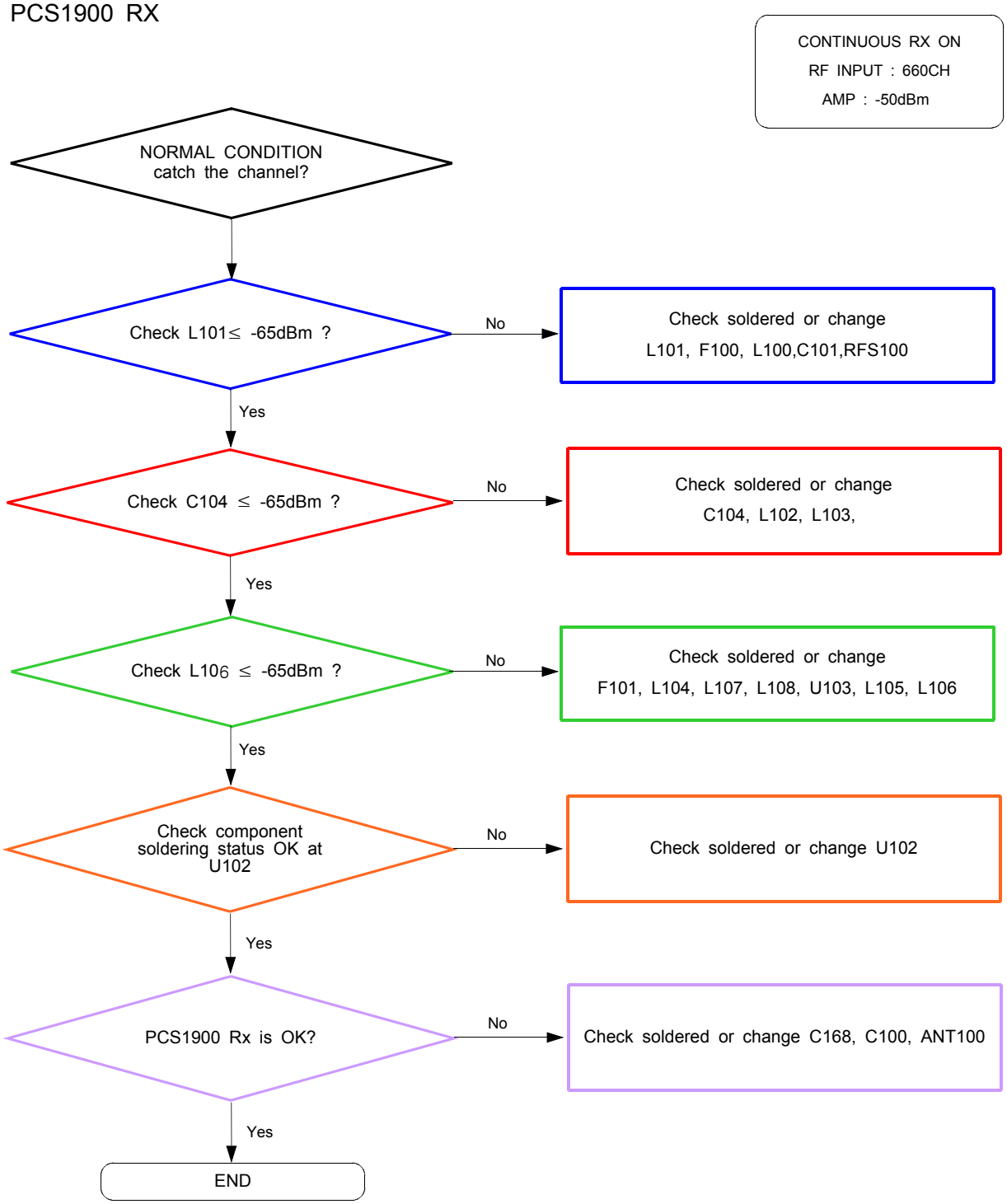

Confidential and proprietary-the contents in this service guide subject to change without prior notice.
Distribution, transmission, or infringement of any content or data from this document without Samsung's written authorization is strictly prohibited.

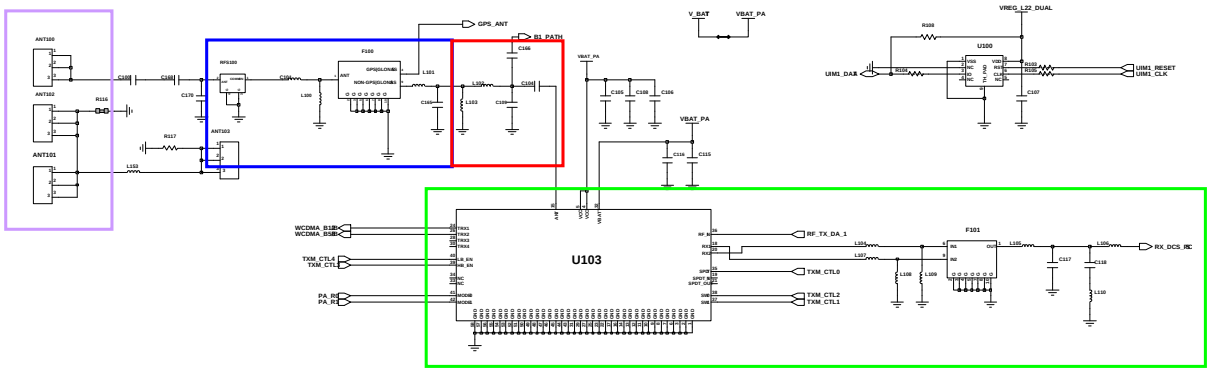

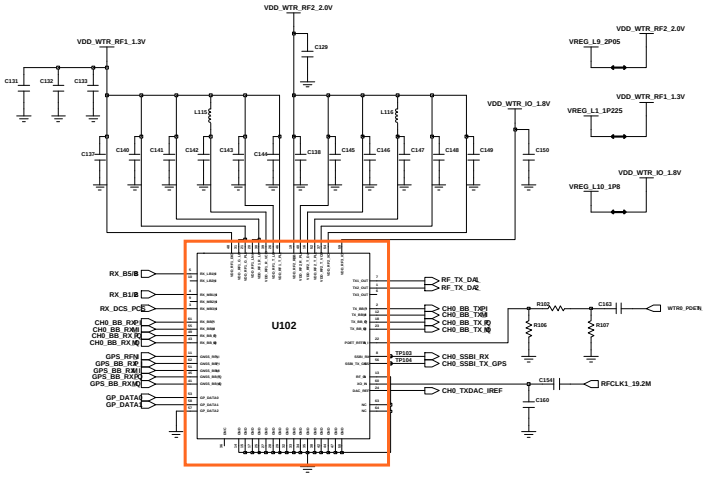

Confidential and proprietary-the contents in this service guide subject to change without prior notice.
Distribution, transmission, or infringement of any content or data from this document without Samsung's written authorization is strictly prohibited.

8-3-15. GPS

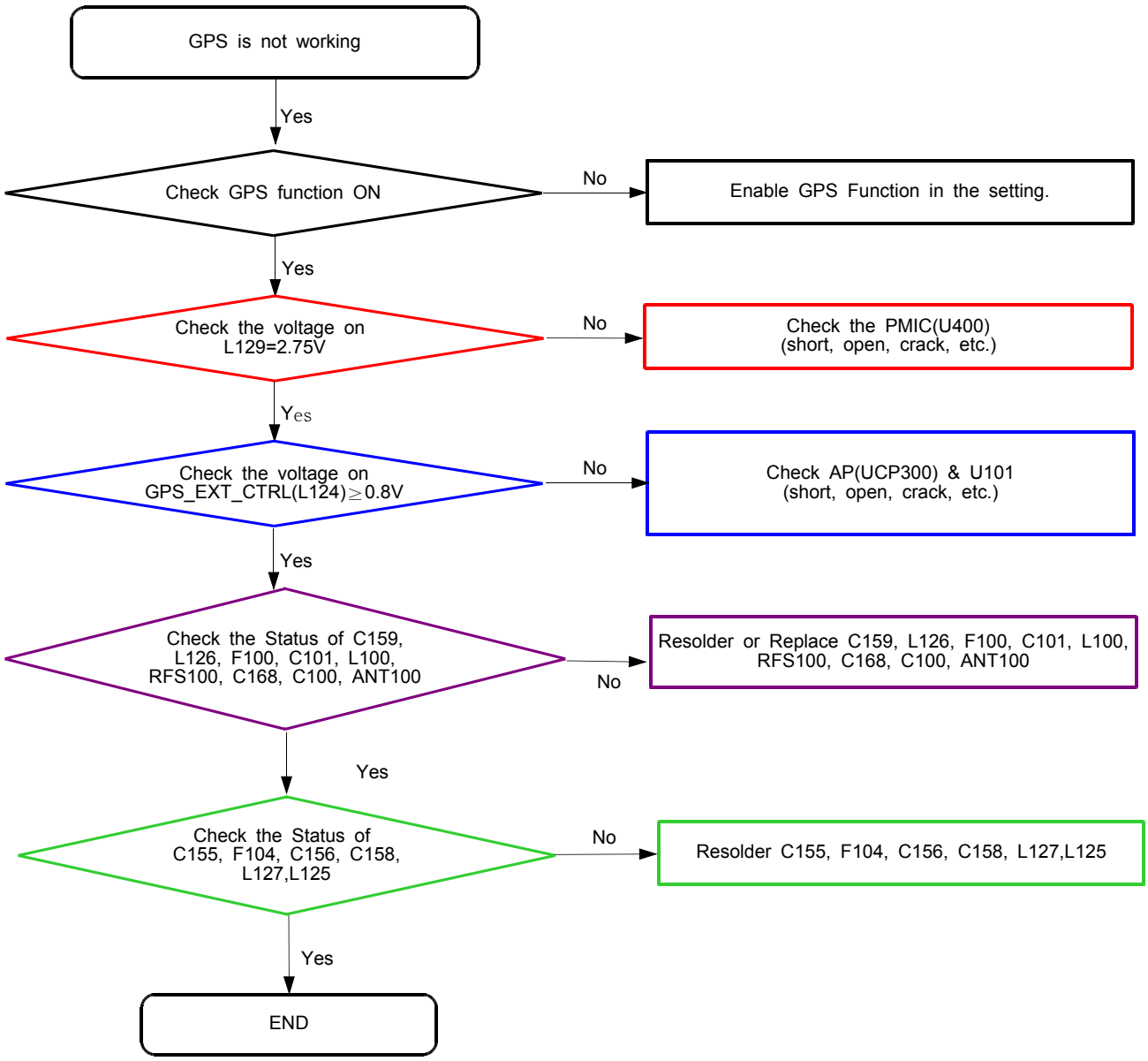

Confidential and proprietary-the contents in this service guide subject to change without prior notice.
Distribution, transmission, or infringement of any content or data from this document without Samsung's written authorization is strictly prohibited.

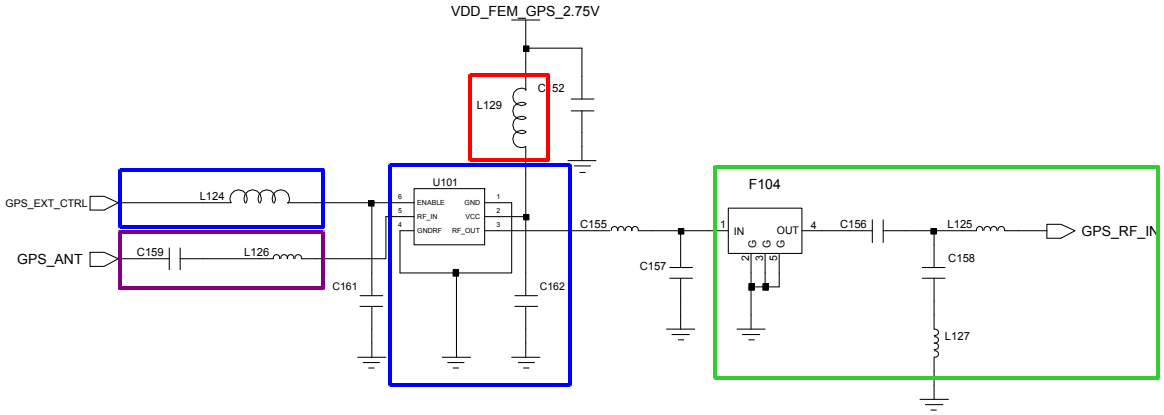

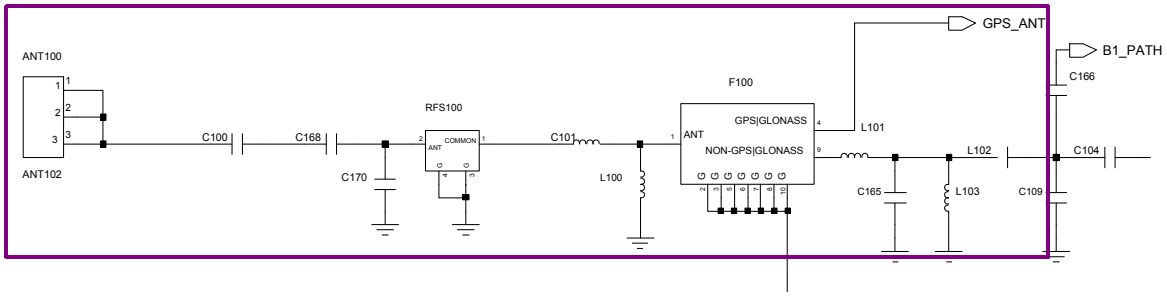

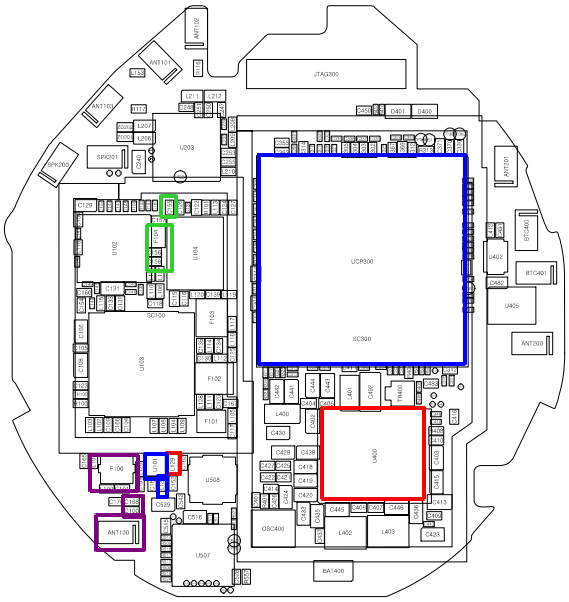

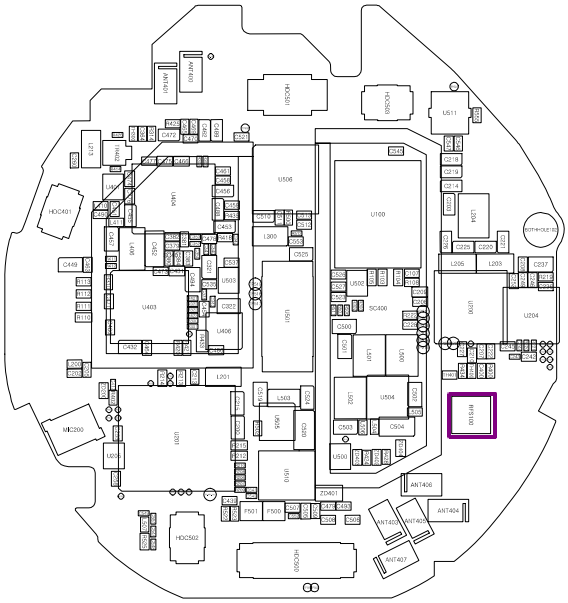

Confidential and proprietary-the contents in this service guide subject to change without prior notice.
Distribution, transmission, or infringement of any content or data from this document without Samsung's written authorization is strictly prohibited.

8-3-16. Microphone Part

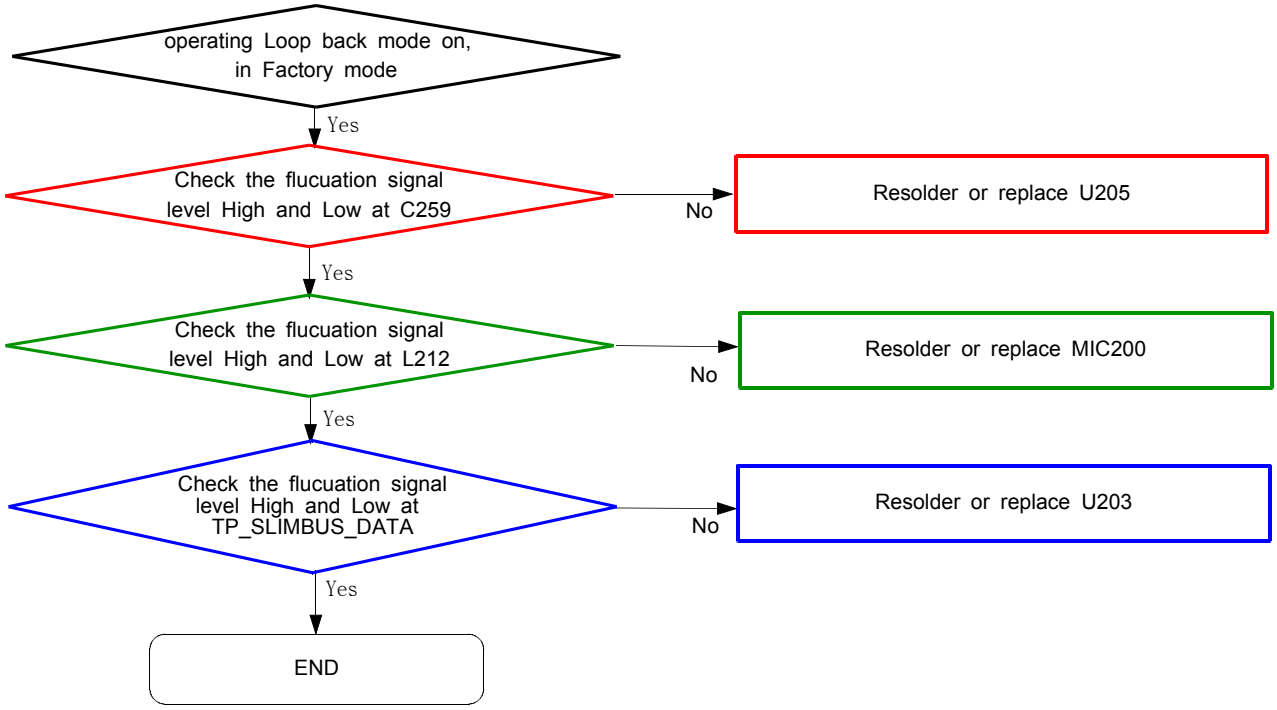

Confidential and proprietary-the contents in this service guide subject to change without prior notice.
Distribution, transmission, or infringement of any content or data from this document without Samsung's written authorization is strictly prohibited.

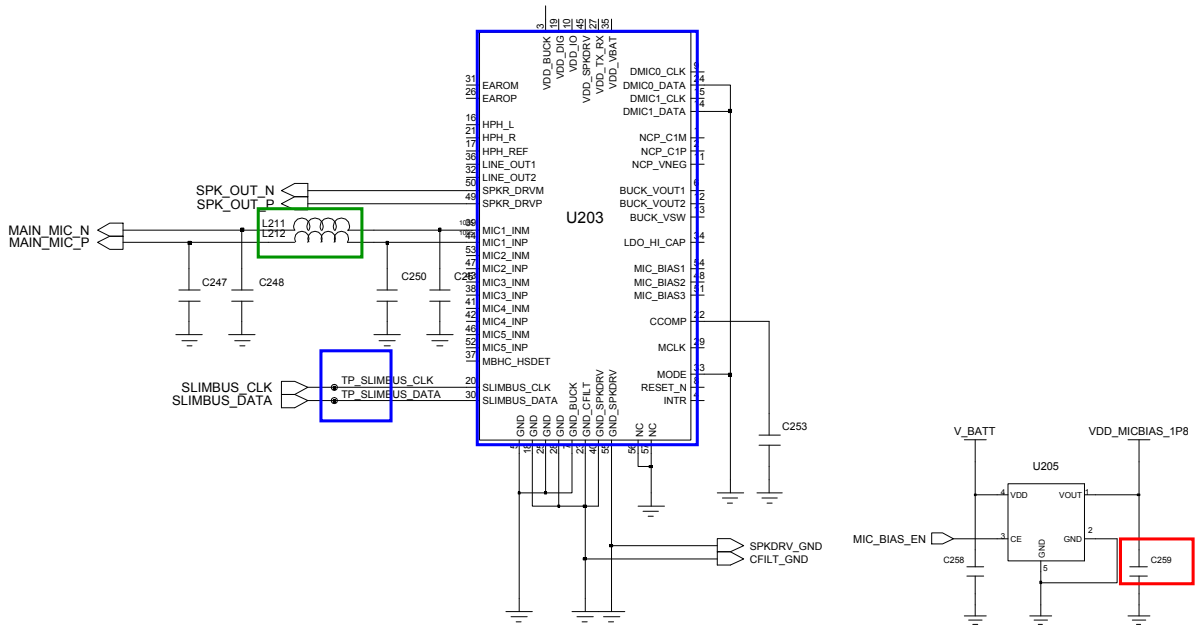

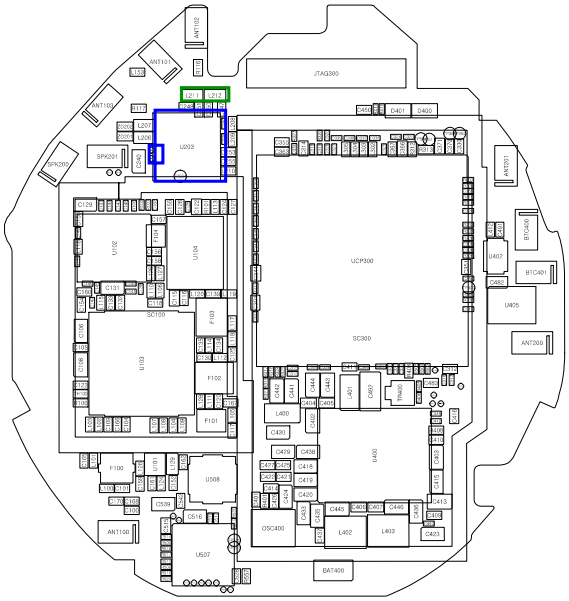

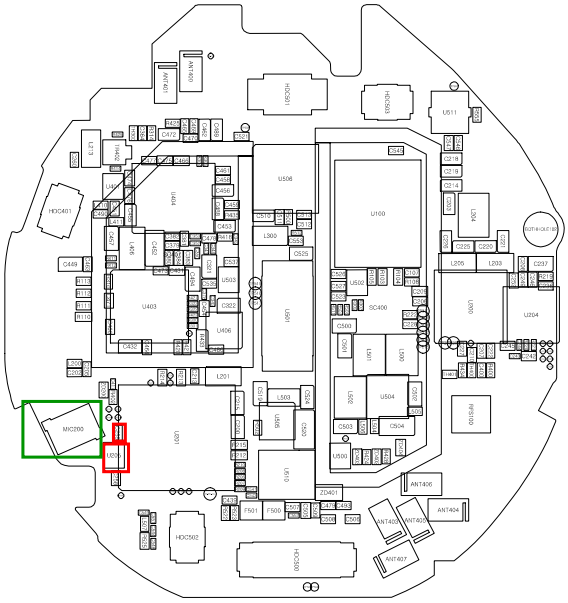

Confidential and proprietary-the contents in this service guide subject to change without prior notice.
Distribution, transmission, or infringement of any content or data from this document without Samsung's written authorization is strictly prohibited.

8-3-17. Speaker Part

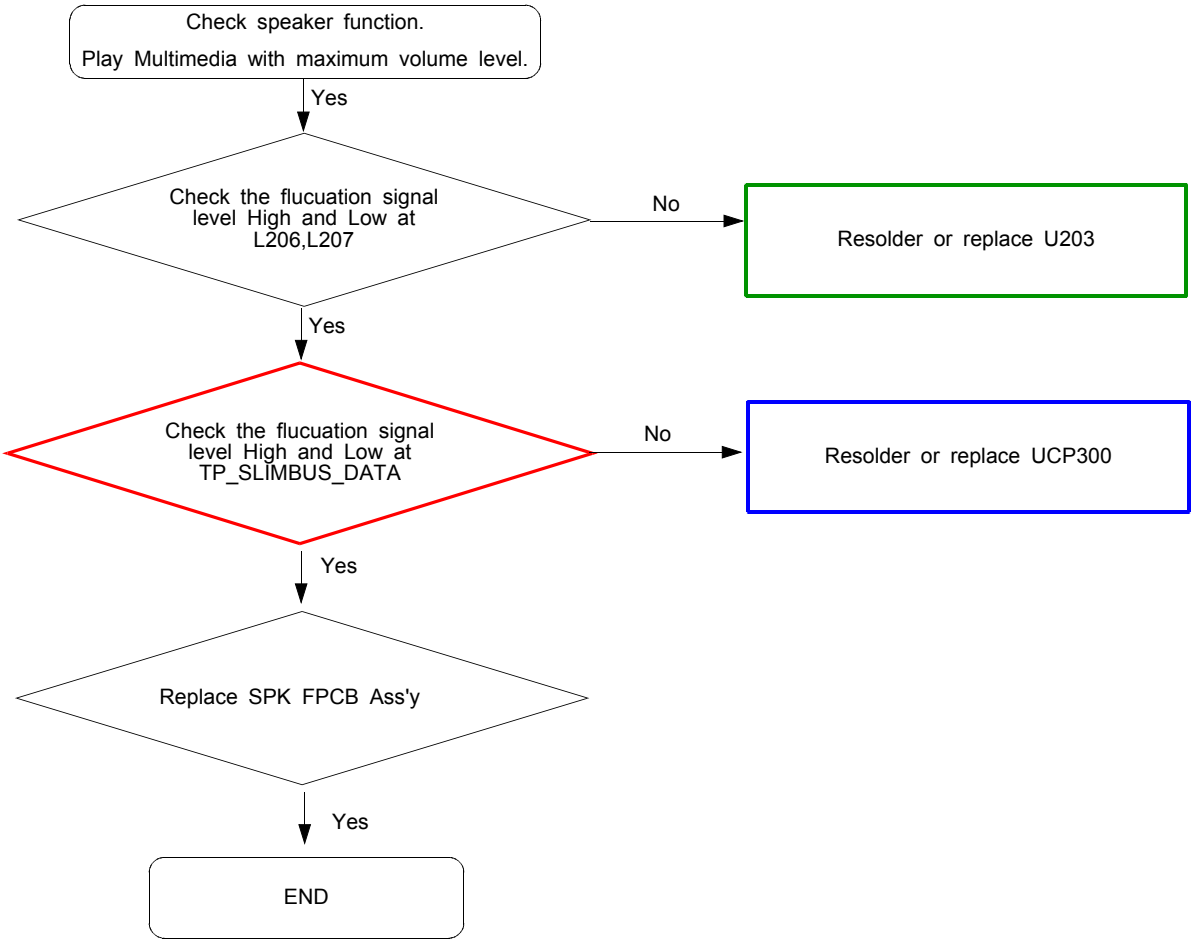

Confidential and proprietary-the contents in this service guide subject to change without prior notice.
Distribution, transmission, or infringement of any content or data from this document without Samsung's written authorization is strictly prohibited.

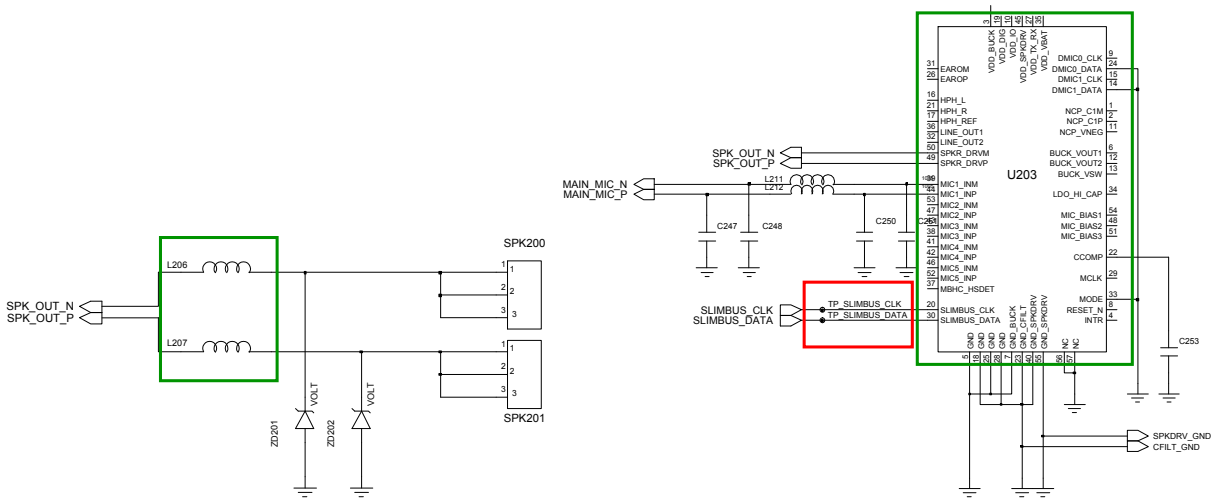

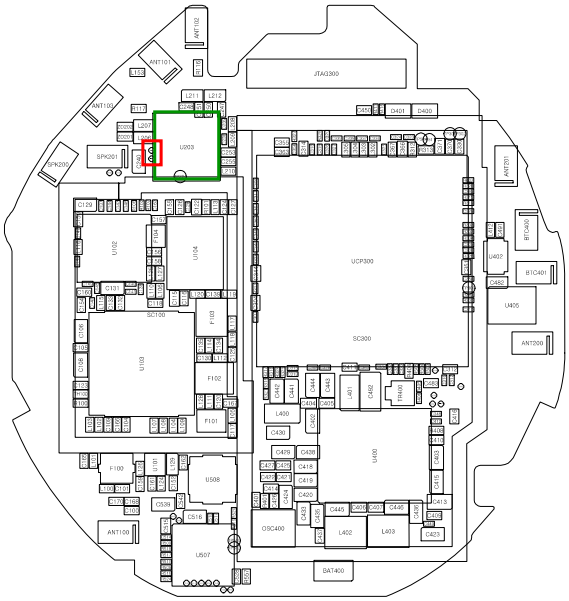

Confidential and proprietary-the contents in this service guide subject to change without prior notice.
Distribution, transmission, or infringement of any content or data from this document without Samsung's written authorization is strictly prohibited.

8-3-18. Sensor

8-3-18-1 HRM Sensor

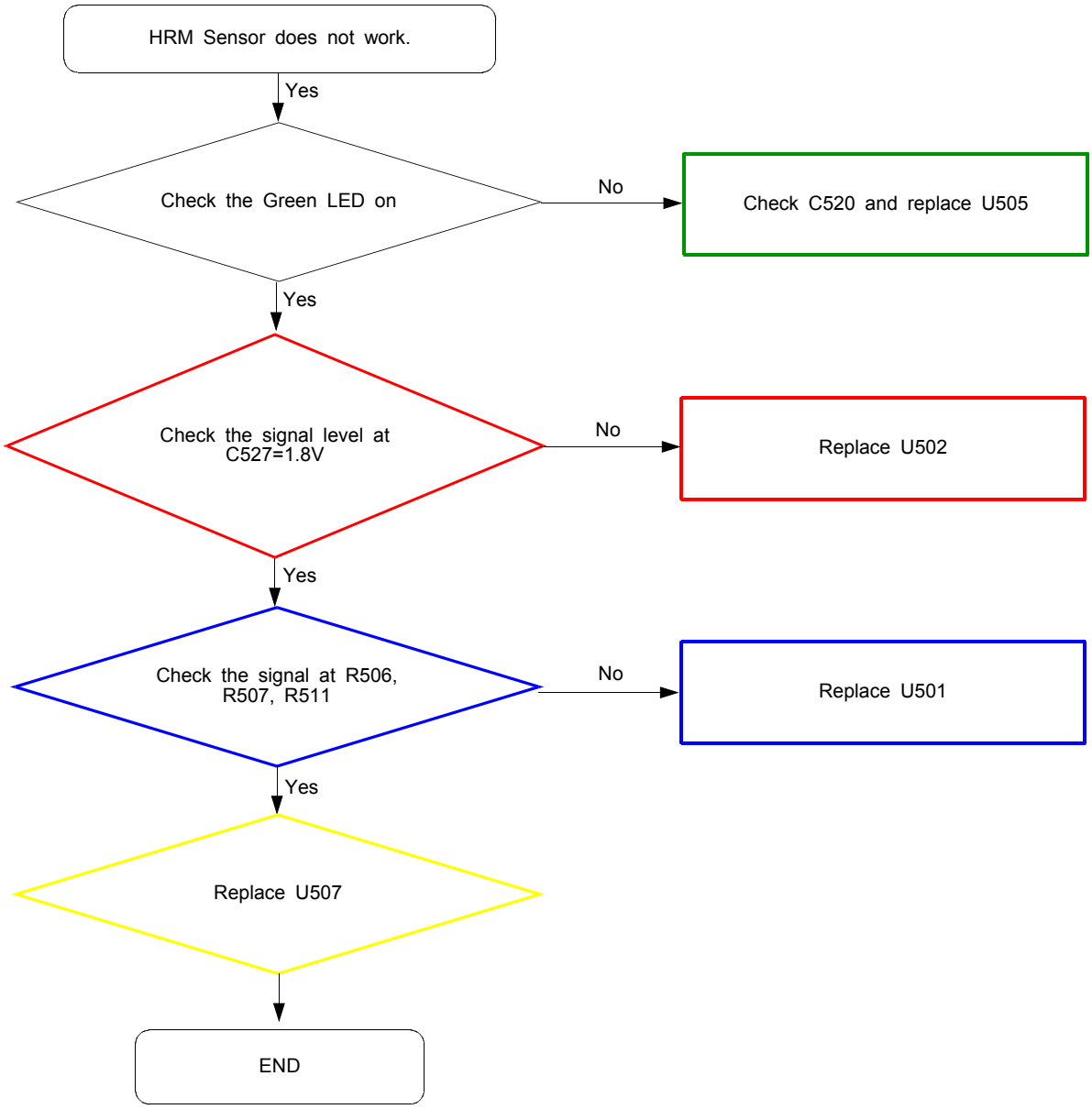

Confidential and proprietary-the contents in this service guide subject to change without prior notice.
Distribution, transmission, or infringement of any content or data from this document without Samsung's written authorization is strictly prohibited.

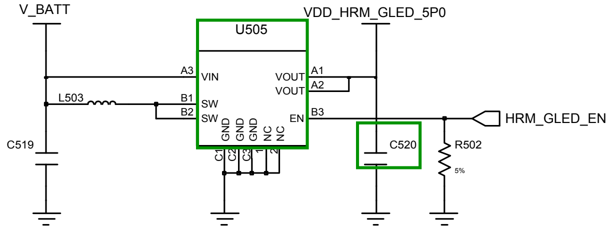

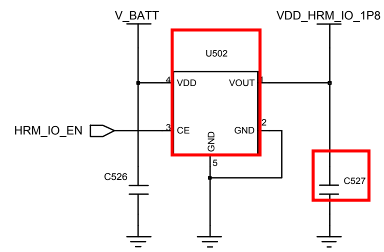

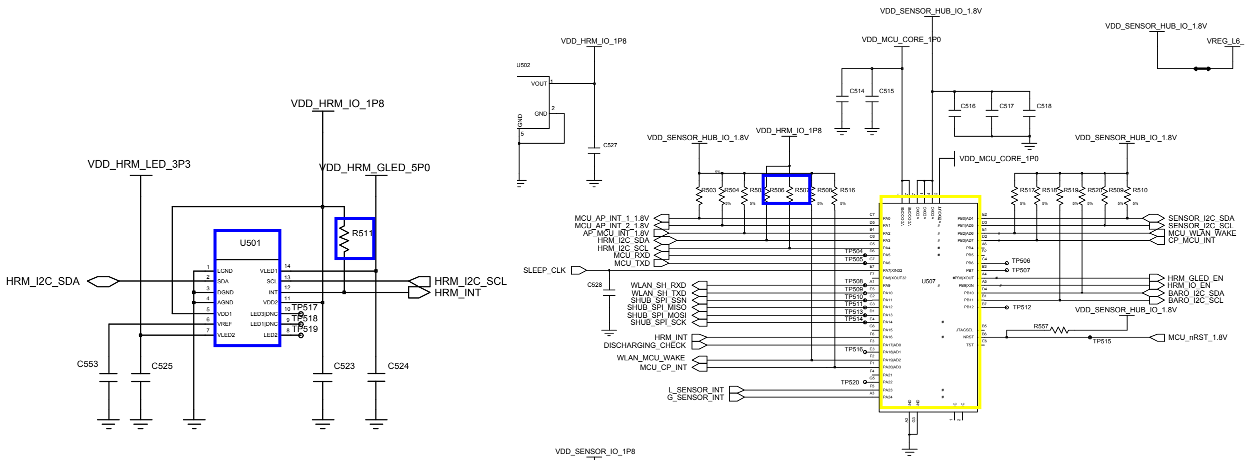

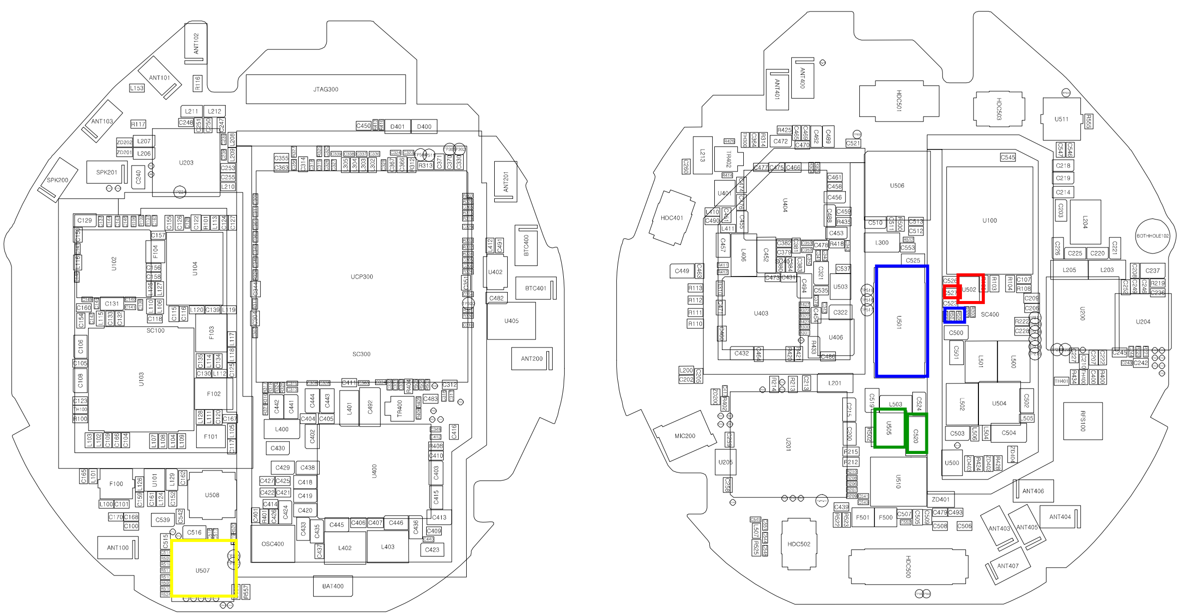

Confidential and proprietary-the contents in this service guide subject to change without prior notice.
Distribution, transmission, or infringement of any content or data from this document without Samsung's written authorization is strictly prohibited.

8-3-18-2 6-Axis Sensor

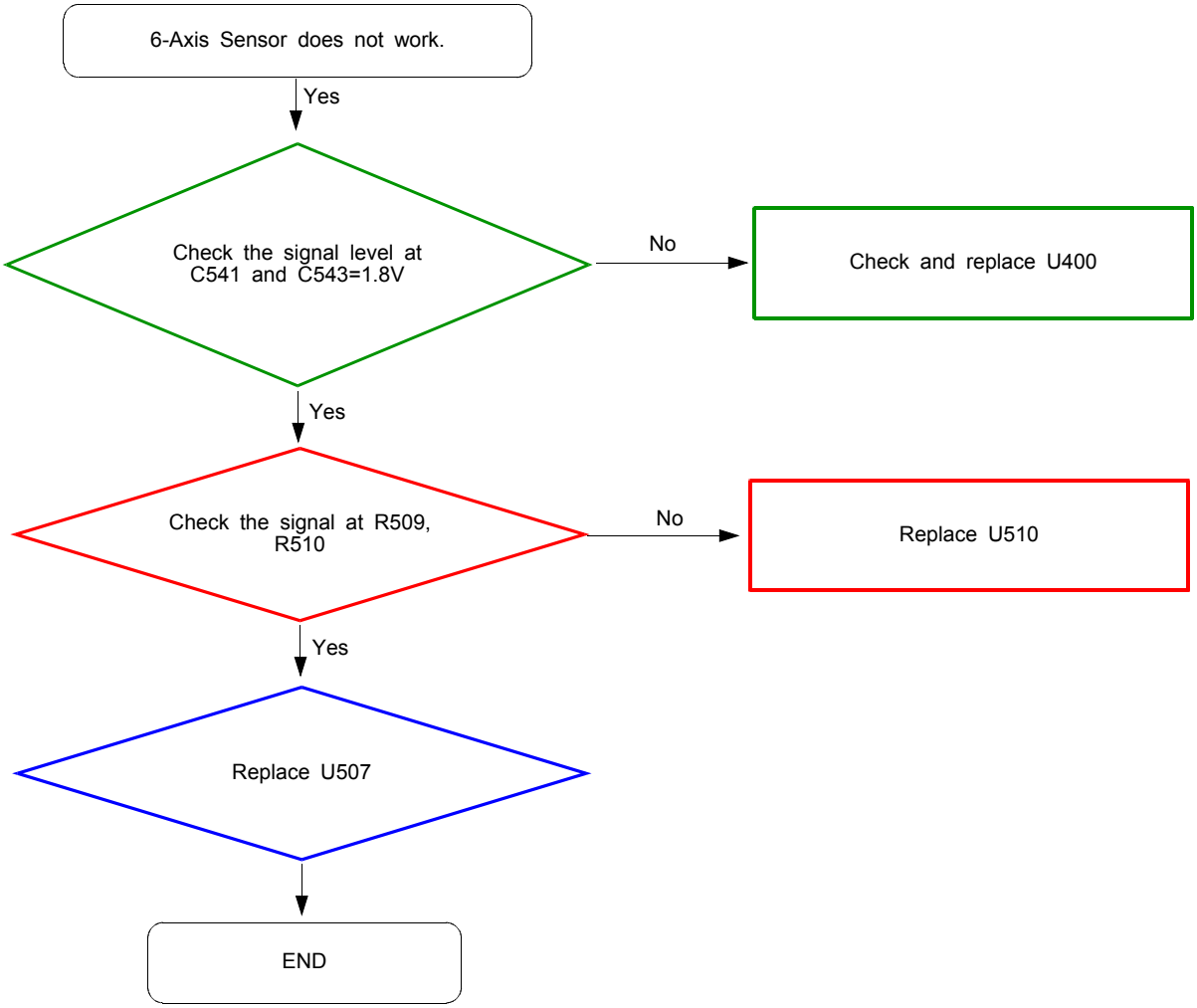

Confidential and proprietary-the contents in this service guide subject to change without prior notice.
Distribution, transmission, or infringement of any content or data from this document without Samsung's written authorization is strictly prohibited.

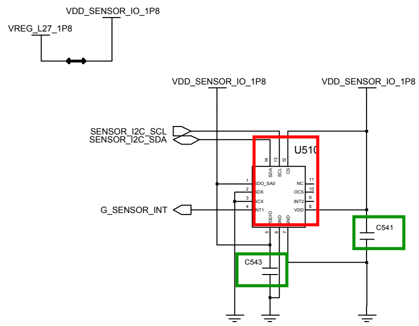

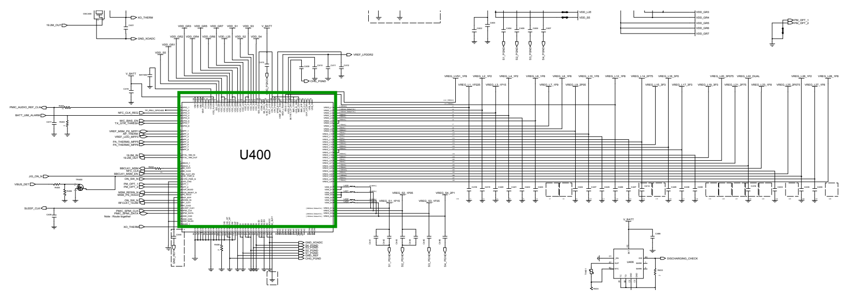

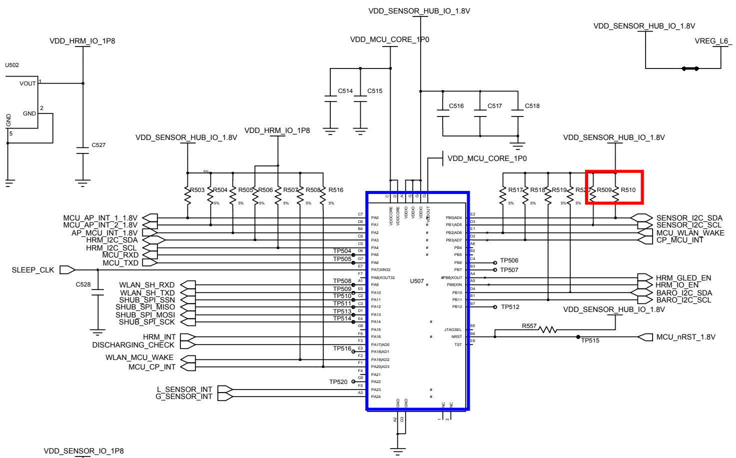

VDD_SENSOR_IO_1P8

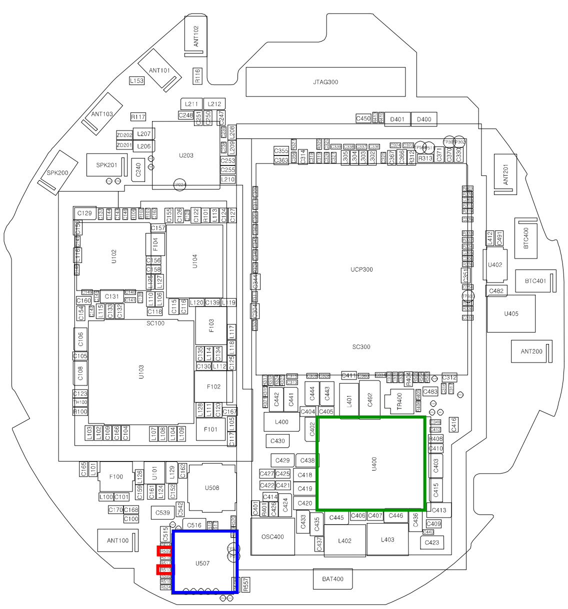

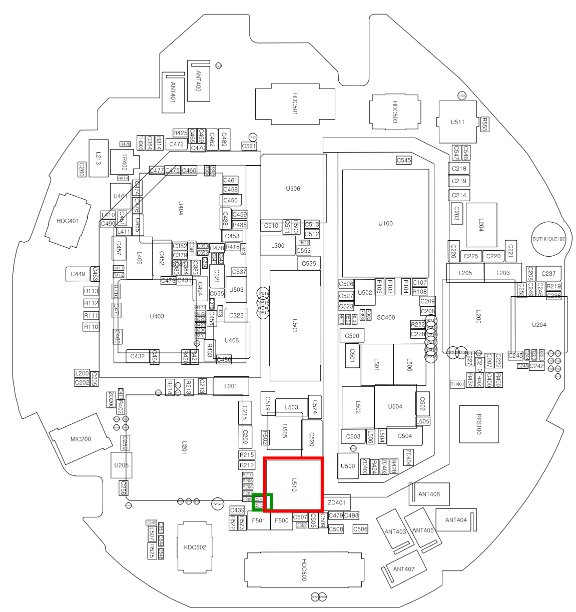

Confidential and proprietary-the contents in this service guide subject to change without prior notice.
Distribution, transmission, or infringement of any content or data from this document without Samsung's written authorization is strictly prohibited.

8-3-18-3 Barometer Sensor

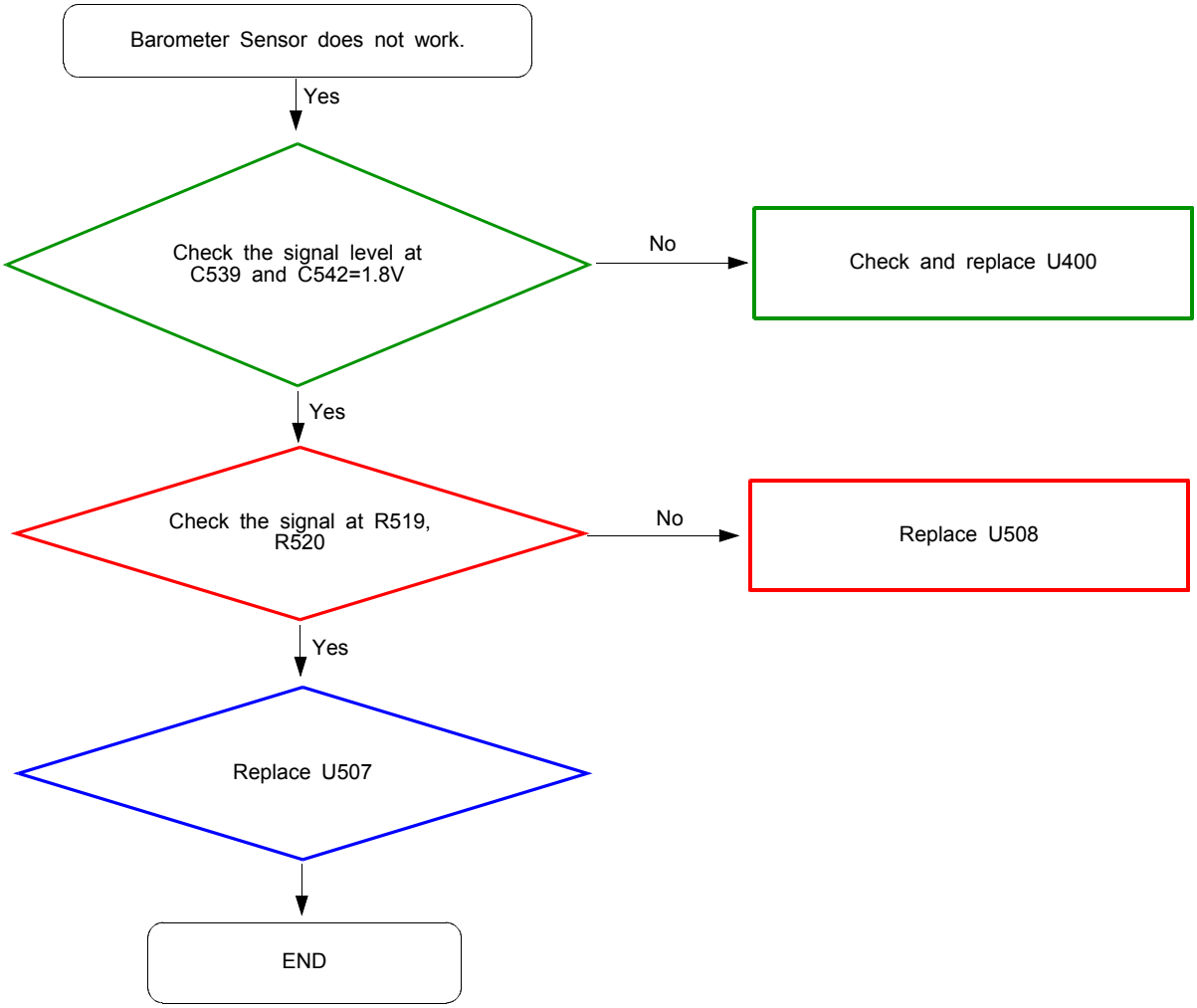

Confidential and proprietary-the contents in this service guide subject to change without prior notice.
Distribution, transmission, or infringement of any content or data from this document without Samsung's written authorization is strictly prohibited.

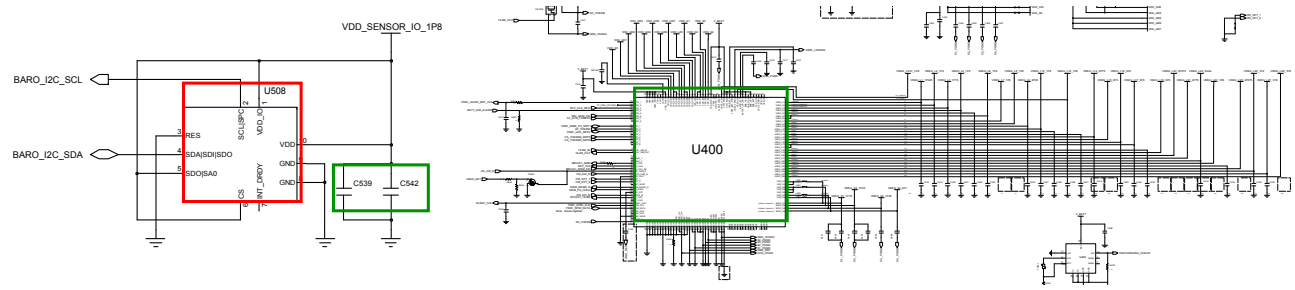

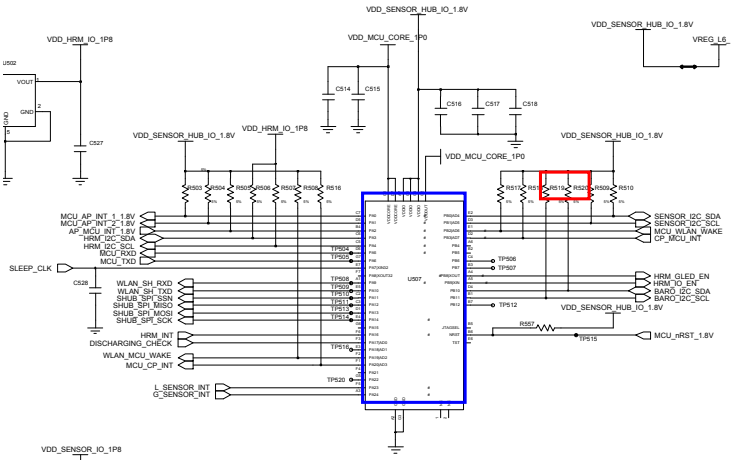

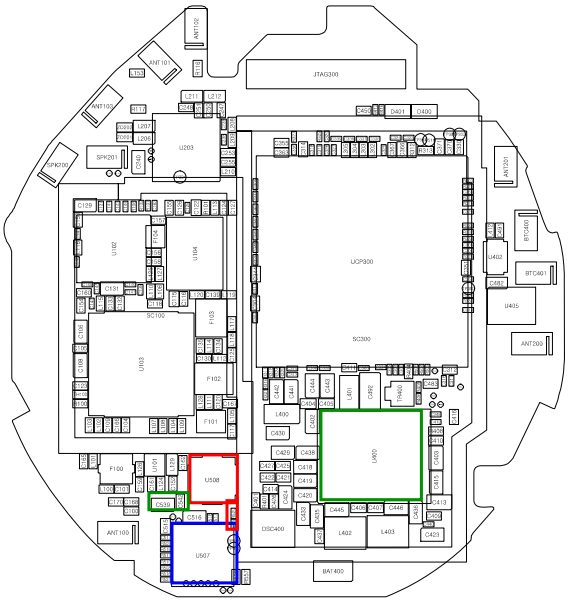

Confidential and proprietary-the contents in this service guide subject to change without prior notice.
Distribution, transmission, or infringement of any content or data from this document without Samsung's written authorization is strictly prohibited.

8-3-18-4 Light Sensor

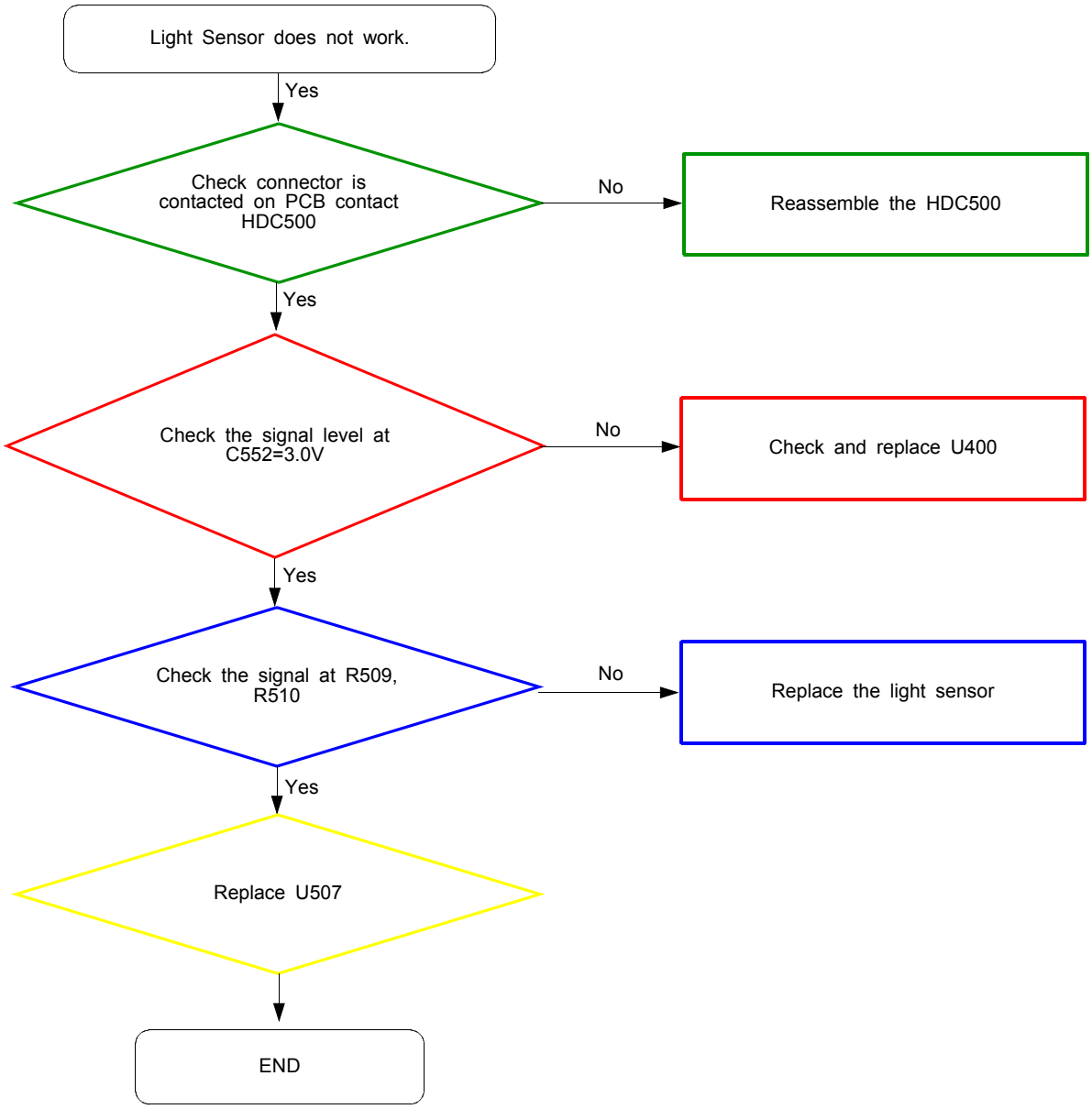

Confidential and proprietary-the contents in this service guide subject to change without prior notice.
Distribution, transmission, or infringement of any content or data from this document without Samsung's written authorization is strictly prohibited.

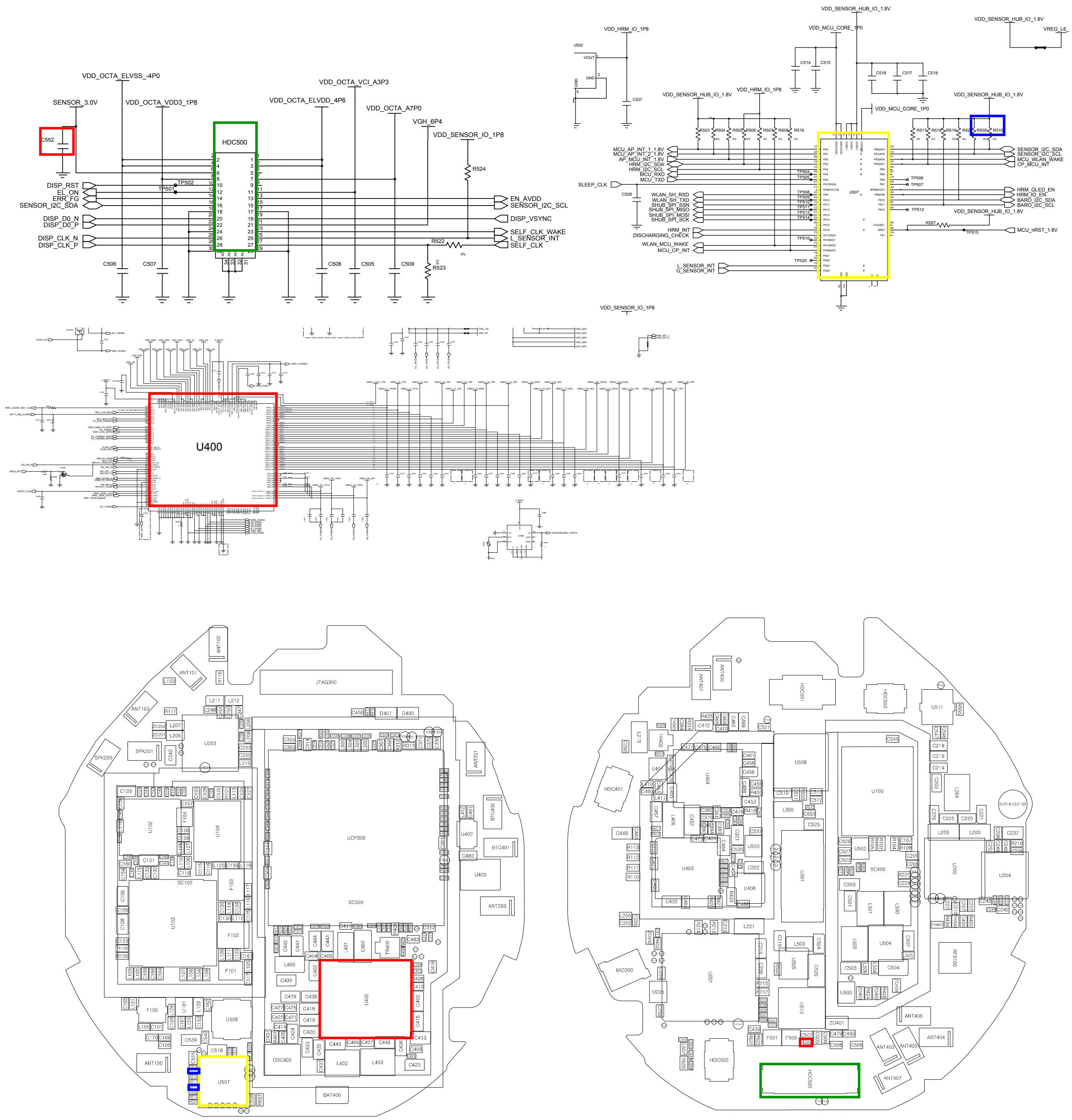

Confidential and proprietary-the contents in this service guide subject to change without prior notice.
Distribution, transmission, or infringement of any content or data from this document without Samsung's written authorization is strictly prohibited.

8-3-18-5 HALL IC Sensor

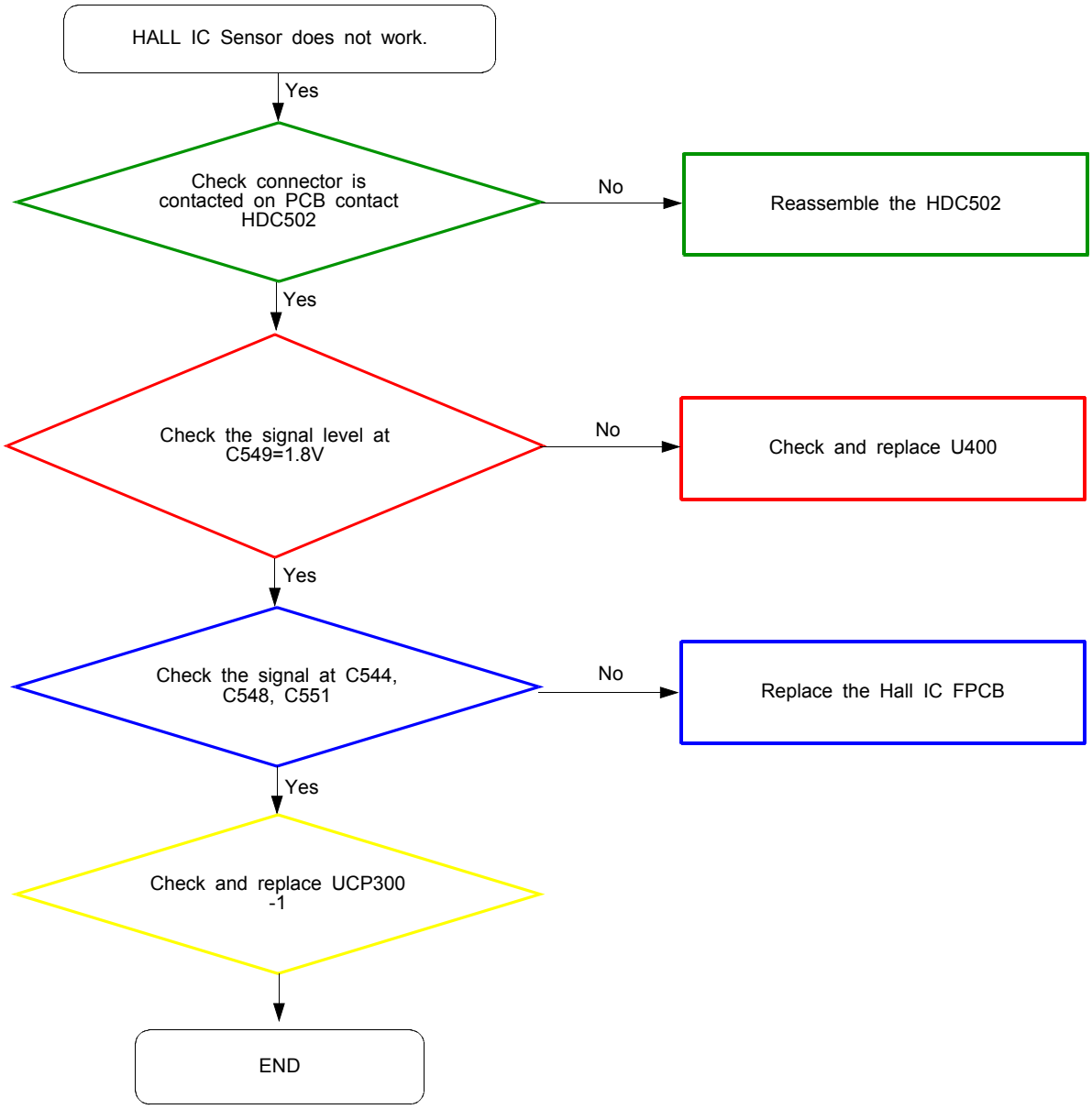

Confidential and proprietary-the contents in this service guide subject to change without prior notice.
Distribution, transmission, or infringement of any content or data from this document without Samsung's written authorization is strictly prohibited.

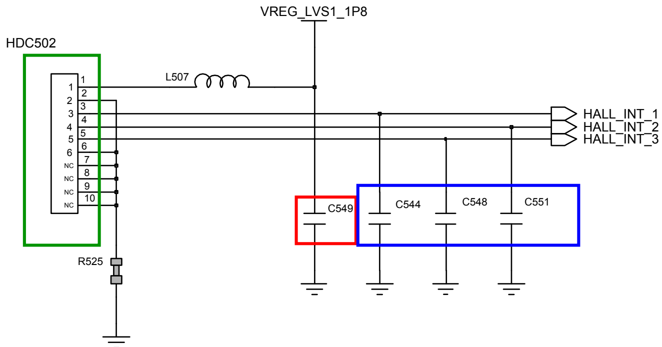

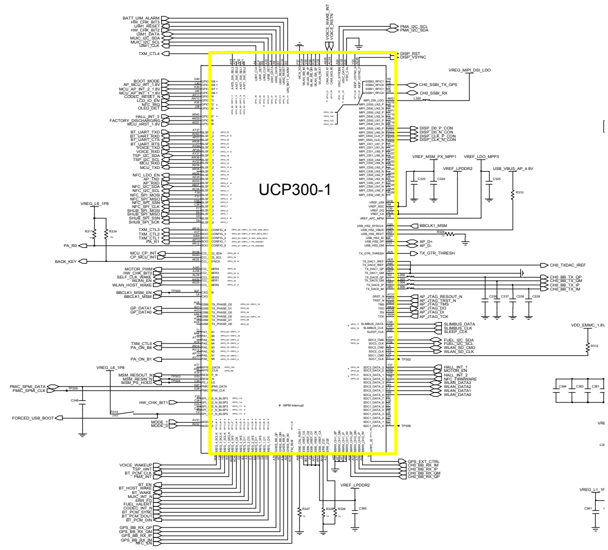

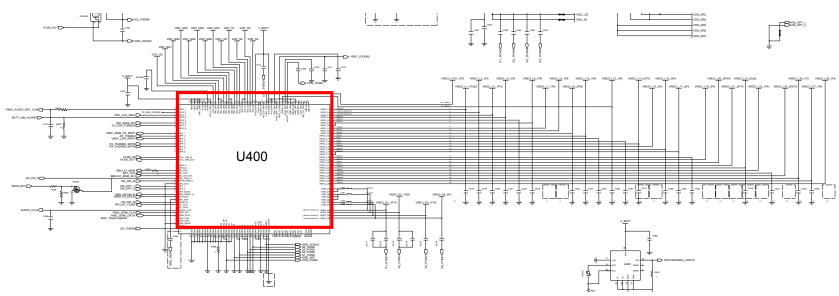

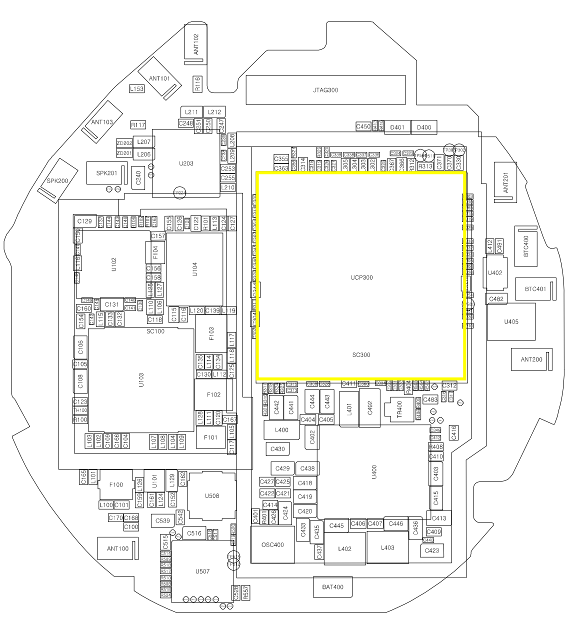

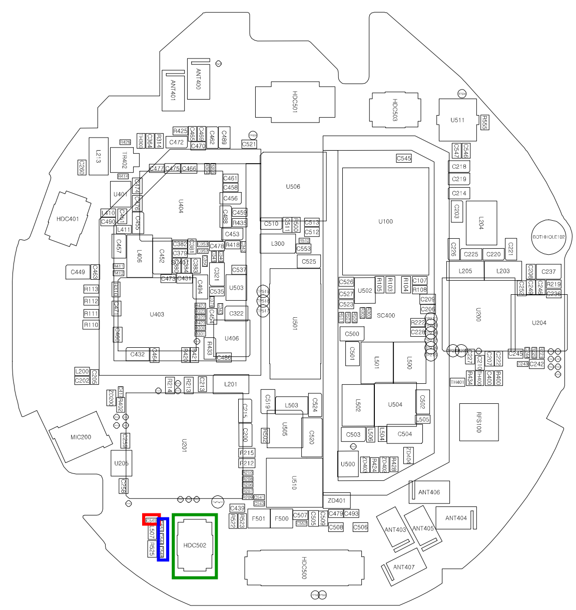

Confidential and proprietary-the contents in this service guide subject to change without prior notice.
Distribution, transmission, or infringement of any content or data from this document without Samsung's written authorization is strictly prohibited.

8-3-19. NFC

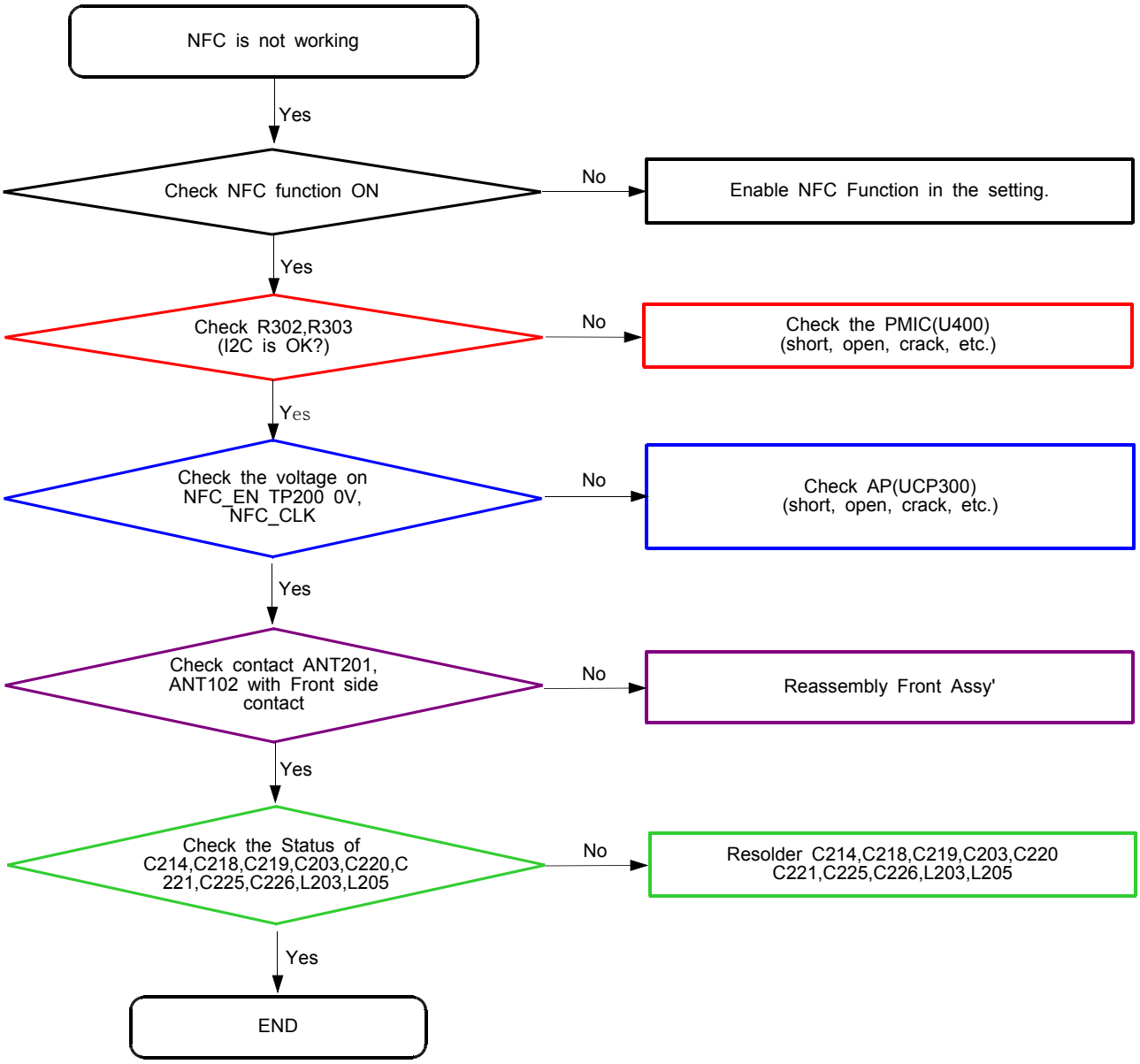

Confidential and proprietary-the contents in this service guide subject to change without prior notice.
Distribution, transmission, or infringement of any content or data from this document without Samsung's written authorization is strictly prohibited.

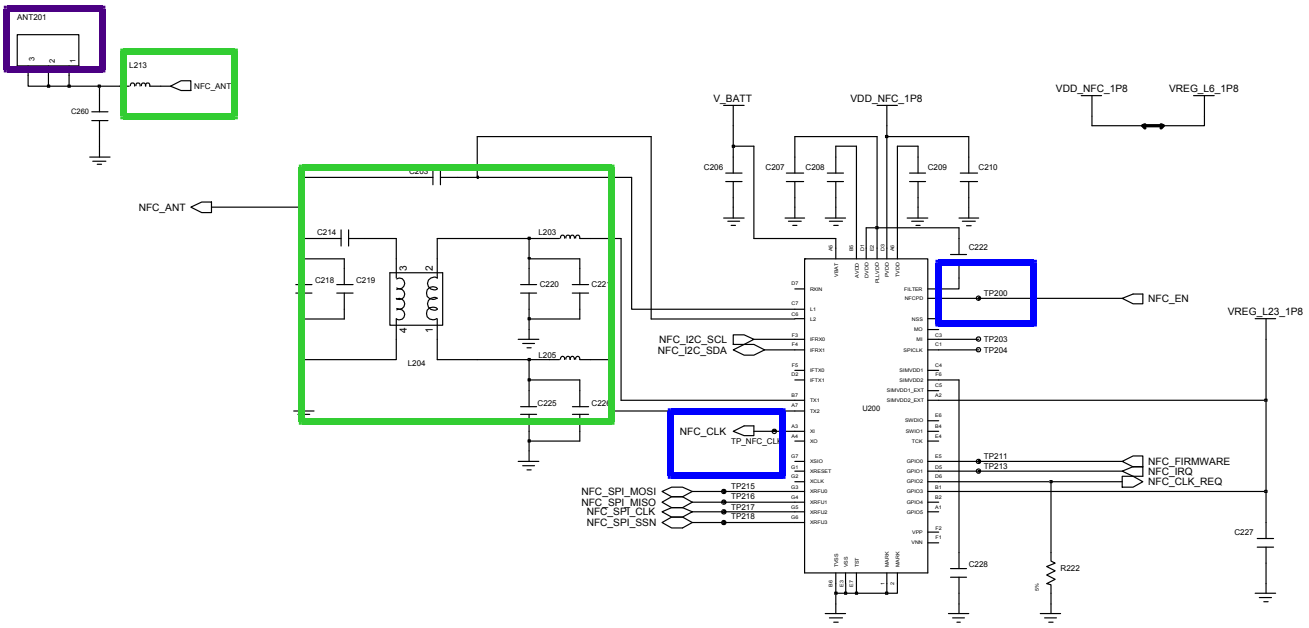

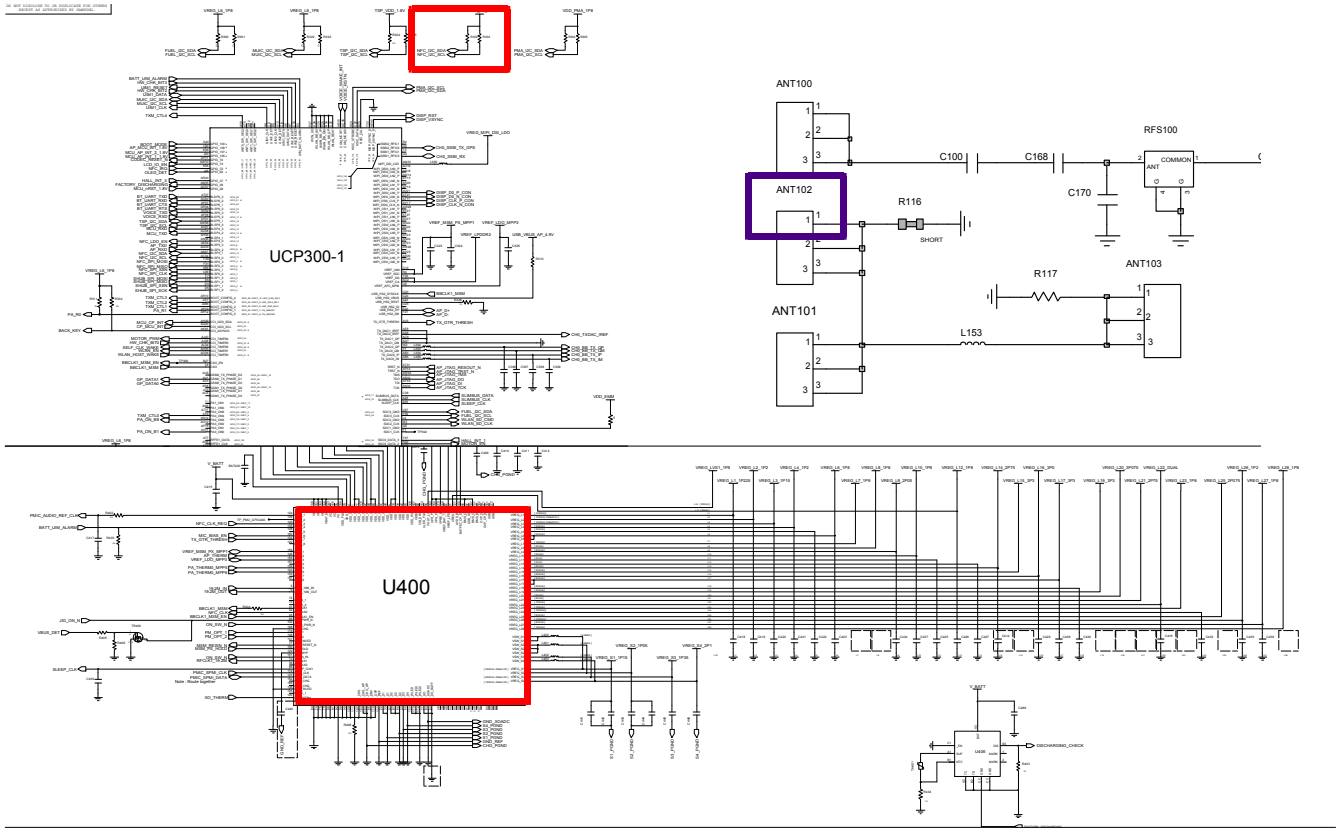

Confidential and proprietary-the contents in this service guide subject to change without prior notice.
Distribution, transmission, or infringement of any content or data from this document without Samsung's written authorization is strictly prohibited.

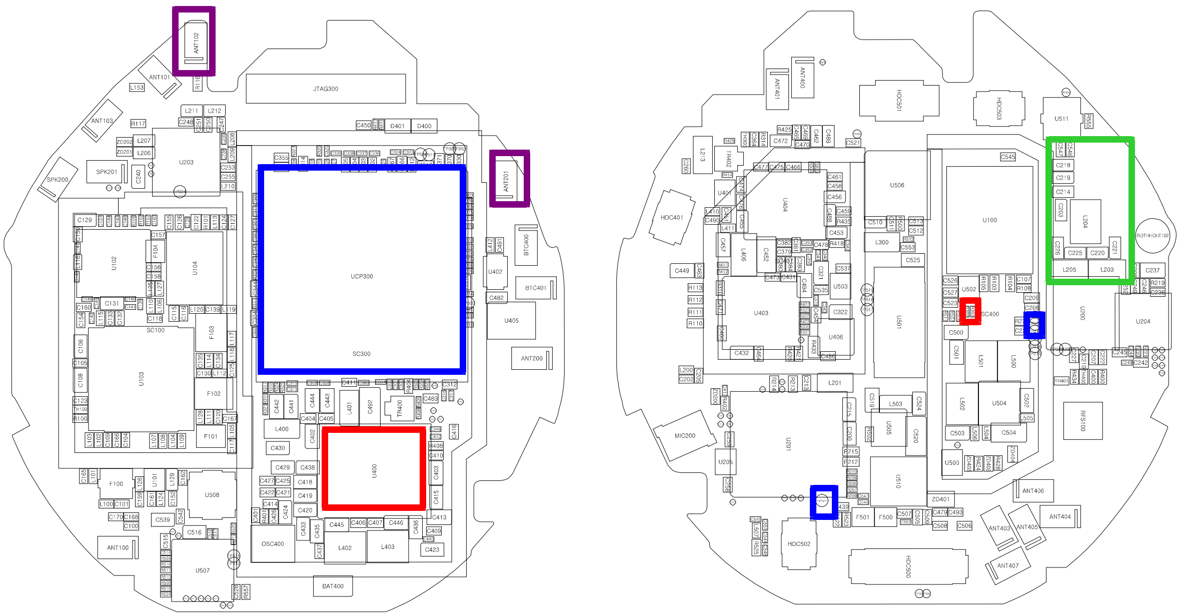

Confidential and proprietary-the contents in this service guide subject to change without prior notice.
Distribution, transmission, or infringement of any content or data from this document without Samsung's written authorization is strictly prohibited.